SR27A-8D2

Sandwich Top 27” Prep Refrigerator with Drawers

STEELHEART

SR27A-8D2
02/08/19
Item # 13467

Item #: _____

Project: _____

Qty: _____

AIA#: _____

W x D x H
27” x 30” x 44.25”*
*with 6” casters

AQ | The KCL CADalog | Intertek | Intertek | ISO9001·ISO14001 | NATURAL REFRIGERANT | FACTORY WARRANTY Parts & Labor 3 YR Entire Machine, Parts 5 YR Compressor *

Dimensions / Capacity	One-Section SR27A-8D2
Interior Storage Capacity (CF)	7.21 ft³
Interior Storage Capacity (CF) (AHAM)	6.22 ft³
Overall Width x Depth (including 1” bumper)	27” x 31”
Height (including 6” casters)	44.25”
Depth with Cutting Board Installed	30.7”
Depth with Drawer Fully Open (including 1” bumper)	52”
Pan Capacity (# of 1/6 size x 4” deep)	8
Crated Shipping Weight	205 lbs.
Crated Length x Width x Height	32” x 31.5” x 46.5”

Electrical / Refrigeration	One-Section SR27A-8D2
Voltage	115/60/1
HACR Breaker	15.0 Amps
Electrical Connection (NEMA)	5-15P
Voltage Range	104-126
Ambient Temp. Range	45° to 100°F
Control Setpoint Range	32° to 52°F
Amperage	2.4
Energy Consumption (kWh/day) @NSF	1.9
Heat Rejection (BTU/Hr.) @NSF	270
Approx. Nominal Compres. BTU/HR (HP)	1354(1/5HP)
Refrigerant / Charge Amount (oz)	R290 (2.3 oz)

Options

- ☐ Drawer divider bars
- ☐ Stainless steel back
- ☐ Stainless steel lift of covers
- ☐ Additional epoxy shelves
- ☐ Composite cutting board (HS-5265)
- ☐ Rail adapter bars
- ☐ 2.25” Casters
- ☐ 4” Casters
- ☐ Overshelves

Warranty

* 3 Year - parts and Labor on entire machine.
5 Year - Parts on Compressor
Valid in United States, Canada, Puerto Rico and U.S. Territories. Contact factory for warranty in other countries.

Features

- **Engineered to maintain NSF-7 temperatures in 100°F ambient. (Certified to NSF-7 temperatures in 86°F ambient.)**
- **Stainless steel exterior front, sides and top with stainless steel interior sides, back, and floor**
- **Front breathing air flow design**
- Environmentally friendly R290 hydrocarbon refrigerant
- Cabinet and drawers are insulated with 2” CFC free, foamed in place polyurethane
- Innovative air distribution system distributes air evenly to maintain product temperature
- Drawer slides are constructed of 16 gauge stainless steel with acetal rollers
- Drawer frames are formed of 16 gauge stainless steel and securely fastened in the cabinet
- Top drawers will accommodate (1) 12 x 20 full size pan and (2) ¼ size pans. Bottom drawer will accommodate (1) full size pan.
- Extruded aluminum flush mount drawer handle
- Magnetic door gasket is easily removable for cleaning
- 27” x 10” x 1/2” thick white polyethylene cutting board is standard
- Provided with a full complement of polycarbonate plastic 1/6th size pans, 4” deep
- Rails will also accept 6” deep pans for 50% more pan volume
- Removable stainless steel prep guard simplifies cleanup from accidental rail pan drips and spills.
- E-coated evaporator coil
- Standard with 6” casters (two with brakes)
- 10 ft. cord and plug (beginning Nov. 2018)

Hoshizaki reserves the right to change specifications without notice.

SR27A-8D2

Sandwich Top 27” Prep Refrigerator with Drawers

STEELHEART

SR27A-8D2
02/08/19
Item # 13467

FRONT VIEW

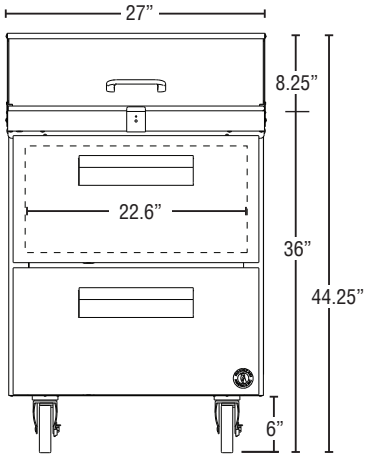

SIDE VIEW

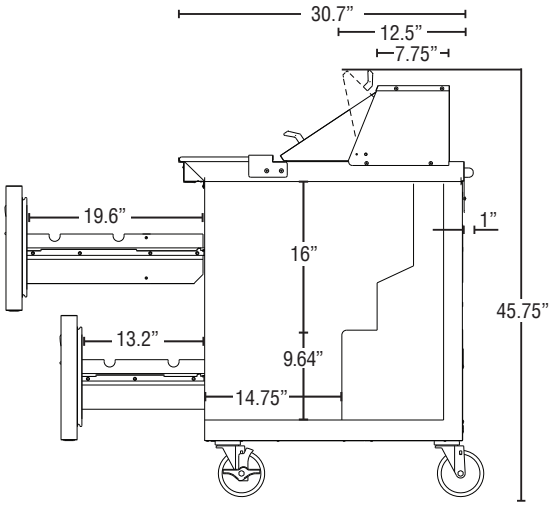

PLAN VIEW

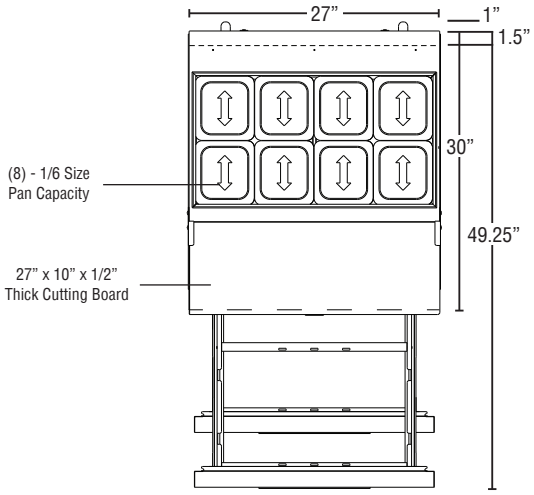

Cabinet Construction

The exterior cabinet top, front, and sides, are constructed of high quality stainless steel. Cabinet is provided with a stainless steel top enclosure and an easily removable stainless steel insulated lift-up cover. The exterior back and bottom are constructed of coated steel. The cabinet interior back and sides are stainless steel with an ABS ceiling and stainless steel floor. Cabinet walls and drawers are insulated with 2” of environmentally friendly, CFC free, foamed in place polyurethane. 6” polyolefin, stem casters (two with brakes) are standard. Preparation tables are supplied with a 27” x 10” x ½” thick N.S.F. approved white polyethylene cutting board.

Drawer Construction

Drawer fronts are constructed of high grade stainless steel inside and out and are insulated with 2” CFC free, foamed in place polyurethane. The bottom drawers will accommodate 6” deep pans. The bottom drawers will accommodate 6” deep pans. Full size pans in the top drawer can be oriented longways from front to back or left to right. The top drawer will accommodate 4” deep pans with either orientation. The top drawer will also accommodate 6” deep full-size pans when oriented longways from left to right and provide capacity for (2) ¼ size pans 4” deep in the rear of the drawer. HS-5433 divider bar is recommended for this configuration. Drawer frames are formed of 16 gauge stainless steel and securely fastened in the cabinet. The drawer slides are constructed of heavy duty 16 gauge stainless steel with durable acetal rollers with stainless steel ball bearings to prevent metal to metal contact. The drawer slides have a dynamic load capacity of 175 lbs. and have been life tested (fully loaded) three hundred thousand cycles without showing significant wear. The flush mount handles are constructed of extruded aluminum. Snap-in magnetic drawer gaskets are durable and easily removed for cleaning.

Refrigeration System

Front breathing refrigeration system allows unit to be built in to any enclosure with zero side or rear clearance. The high efficiency refrigeration system is self-contained with an E-coated evaporator for extended life. Condensate removal is accomplished with an energy efficient non-electric evaporation system. A capillary tube controls the flow of environmentally friendly R290 refrigerant through the evaporator. Unit uses a heated, time initiated defrost to eliminate any ice on the evaporator coil. An innovative air distribution system distributes air evenly around the pans. Engineered to maintain NSF-7 temperatures in 100°F ambient. (Certified to NSF-7 temperatures in 86°F ambient.) Preparation tables are supplied with a full complement of N.S.F. approved plastic 1/6 size pans, 4” deep and stainless steel adapter bars. Rail will also accommodate 6” deep pans. Pans are located 1.5” below the top to keep food product within easy reach. 115 volt units are equipped with a ten foot cord and NEMA rated plug (20.0 amps or less).