HOSHIZAKI

Parts List

Self-Contained Crescent Cuber

Models
KM-81BAJ
KM-116BAJ
KM-161BAJ, BWJ

hoshizakiamerica.com

Number: 71431
Issued: 7-24-2019
Revised: 1-28-2021

CONTENTS

Auxiliary Codes 3
Note About Ordering Parts 3
A. Main Assembly 4
B. Refrigeration Circuit 7
KM-81BAJ, KM-116BAJ, KM-161BAJ 7
KM-161BWJ 9
C. Water Circuit 11
D. Control Box Assembly 14
E. Accessories & Labels 15

Auxiliary Codes

KM-81BAJ

J-0 April 2019
K-0 January 2020
K-1 March 2020
K-2 May 2020
K-3 August 2020
L-0 January 2021

KM-116BAJ

J-0 April 2019
K-0 January 2020
K-1 June 2020
L-0 January 2021

KM-161BAJ

J-0 April 2019
K-0 January 2020
K-1 March 2020
K-2 May 2020
K-3 August 2020
L-0 January 2021

KM-161BWJ

J-0 April 2019
K-0 February 2020
K-2 November 2020
K-3 December 2020
L-0 January 2021

Auxiliary Code Breakdown

The auxiliary code is the first two characters in the serial number. The first character indicates the year. Years progress or regress in alphabetical order. The series runs from "A" through "V" and the letters "I" and "O" are skipped. The second character indicates significant part changes within a year. Base is "0" and this number advances for each change. In cases where there is a letter in parentheses, this designates the month. This is the last character in the serial number. The series runs from "(A)" through "(M)" and the letter "(I)" is skipped. This designation is only included when identifying a parts change within an auxiliary code.

Note About Ordering Parts

Most assemblies cannot be ordered as complete units; parts in the assemblies generally must be ordered separately.

A. Main Assembly

KM-81BAJ, KM-116BAJ, KM-161BAJ, KM-161BWJ

J-0 to L-0

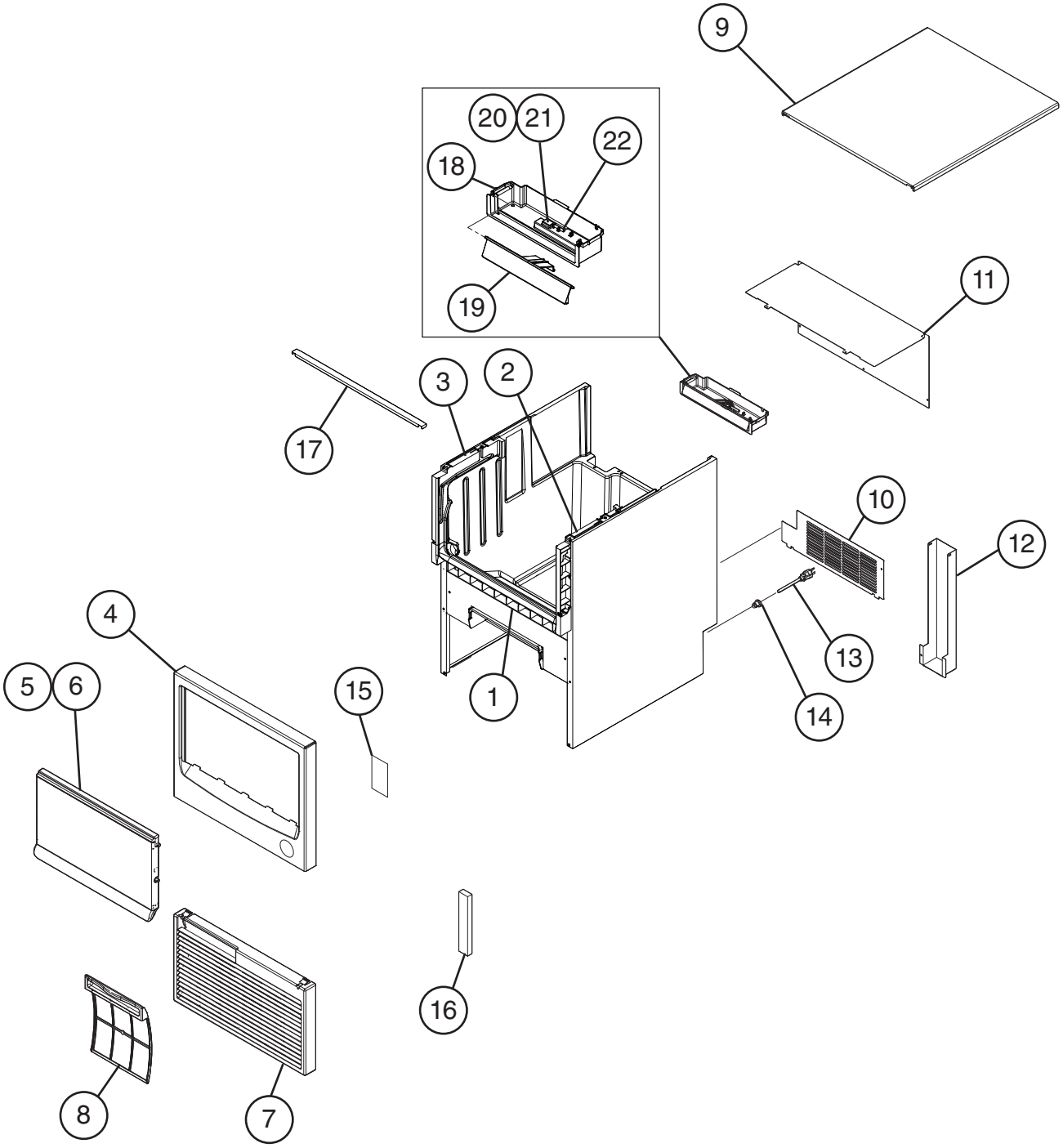

Title: A. Main Assembly Model: KM-81BAJ, KM-116BAJ, KM-161BAJ, KM-161BWJ													
Index No.	Description	Material or Model Number	Part Number	Required Number									
				J-0 to K-1	K-2 to L-0								
Main Assembly													
1	Front Frame	**KM-81BAJ**	250744-01	1	1								
		KM-116BAJ, KM-161B_J	250745-01	1	1								
2	Right Rail		124932P01	1	1								
3	Left Rail		124933P01	1	1								
4	Front Panel	**KM-81BAJ**	2A9163G01	1	1								
		KM-116BAJ, KM-161B_J	2A9130G01	1	1								
5	Door (replace with 4 pieces of item 6)	**KM-81BAJ**	374533G02	1	-								
			1A5921G01		1								
		KM-116BAJ, KM-161B_J	369051G01	1	-								
			1A5920G01		1								
6	Collar		481481P02	4	4								
7	Louver	**KM-81BAJ**	117636-01	1	1								
		KM-116BAJ, KM-161B_J	117635-01	1	1								
8	Air Filter	**KM-81BAJ**	250728G01	1	1								
		KM-116BAJ, KM-161B_J	250727G01	1	1								
9	Top Panel Assembly	**KM-81BAJ**	2A9131A08	1	1								
		KM-116BAJ	2A9131A07	1	1								
		KM-161B_J	2A9131A09	1	1								
10	Rear Cover	**KM-81BAJ**	368311-01	1	1								
		KM-116BAJ	368312-01	1	1								
		KM-161BAJ	368313-01	1	1								
		KM-161BWJ	371349M01	1	1								
11	Rear Panel	**KM-81BAJ**	370654M02	1	1								
		KM-116BAJ	370654M01	1	1								
		KM-161B_J	370654M03	1	1								
12	Pipe Cover	**KM-81BAJ KM-116BAJ**	368305-01	1	1								
		KM-161B_J	368305-02	1	1								
13	Power Supply Cord		P00004-01	1	1								
14	Bushing		420472-02	1	1								
15	Overflow Seal	**KM-81BAJ**	472471P01	1	1								
		KM-116BAJ, KM-161B_J	4Y4321P01	1	1								
16	Air Guard	**KM-81BAJ**	470302-01	1	1								
		KM-116BAJ, KM-161BAJ	470302-02	1	1								
		KM-161BWJ	371347M01	1	1								
17	Rail Brace	**KM-81BAJ**	482685M01	1	1								
		KM-116BAJ, KM-161B_J	384405M01	1	1								
18	Mechanical Bin Control Housing	**KM-81BAJ**	4A6595G01	1	1								
		KM-116BAJ, KM-161B_J	4A6594G01	1	1								

Title: A. Main Assembly Model: KM-81BAJ, KM-116BAJ, KM-161BAJ, KM-161BWJ													
				Required Number									
Index No.	Description	Material or Model Number	Part Number	J-0 to K-1	K-2 to L-0								
19	Mechanical Bin Control Actuator	**KM-81BAJ**	371150G01	1	1								
		KM-116BAJ, KM-161B_J	371152G01	1	1								
20	Mechanical Bin Control		431788-02	1	1								
21	Mechanical Bin Control Switch Cover		470314-01	1	1								
22	Silicone Hose	L=680 mm	7730I3656	1	1								

B. Refrigeration Circuit

KM-81BAJ, KM-116BAJ, KM-161BAJ

J-0 to L-0

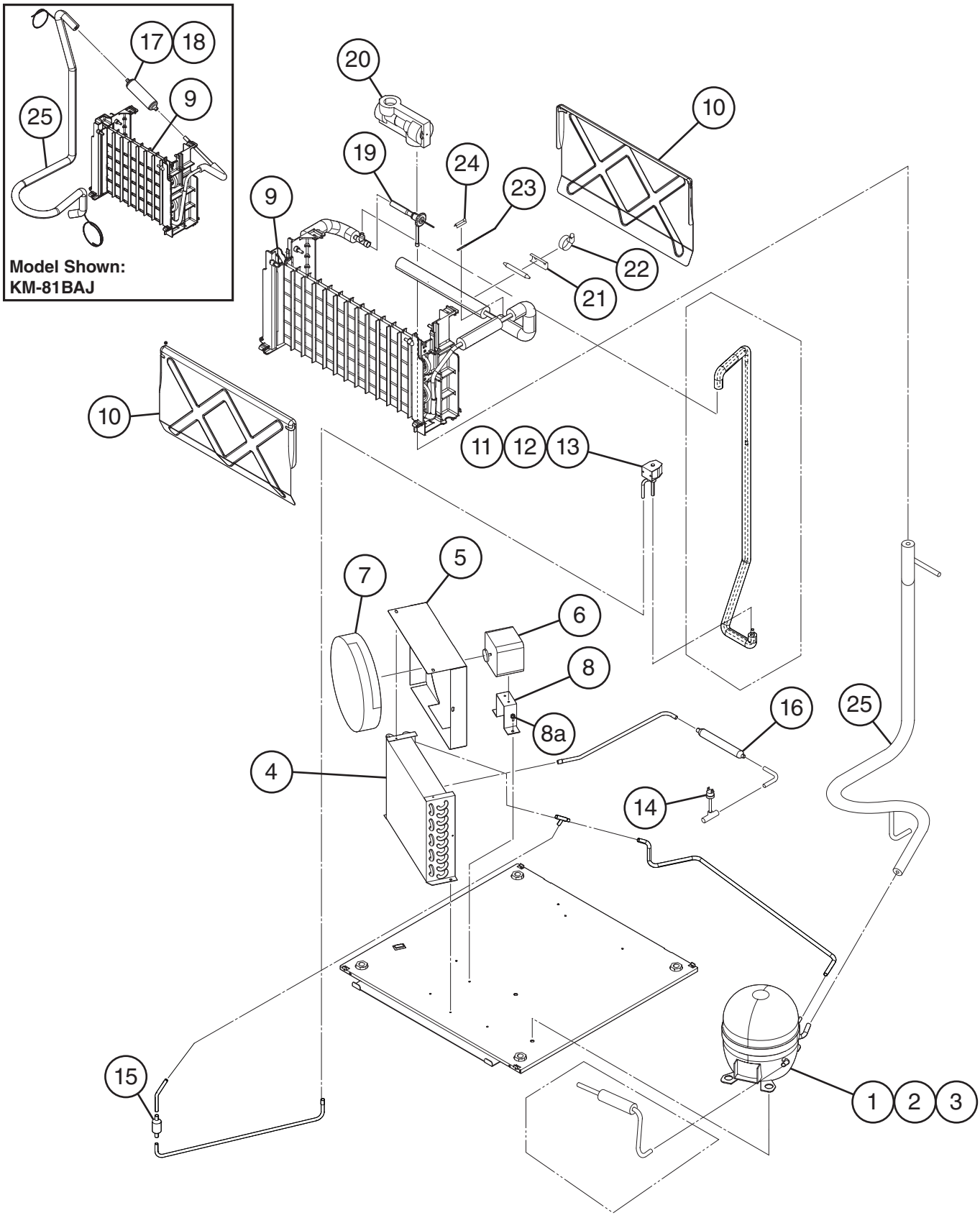

Title: B. Refrigeration Circuit Model: KM-81BAJ, KM-116BAJ, KM-161BAJ													
				Required Number									
Index No.	Description	Material or Model Number	Part Number	J-0 to L-0									
1	Compressor	**KM-81BAJ**	P00023-01	1									
		KM-116BAJ	P00024-01	1									
		KM-161BAJ	P00025-01	1									
2	PTC Start Relay	**KM-81BAJ**	P00354-01	1									
		KM-116BAJ	P00359-01	1									
		KM-161BAJ	438849-01	1									
3	Motor Protector	**KM-81BAJ**	456254-01	1									
		KM-116BAJ	P00360-01	1									
		KM-161BAJ	P00363-01	1									
4	Condenser	**KM-81BAJ**	P00003-01	1									
		KM-116BAJ	P00028-01	1									
		KM-161BAJ	P00030-01	1									
5	Shroud	**KM-81BAJ**	368317-01	1									
		KM-116BAJ	368318-01	1									
		KM-161BAJ	3B0352-01	1									
6	Fan Motor	**KM-81BAJ**	384355G01	1									
		KM-116BAJ, KM-161BAJ	384356G01	1									
7	Fan Blade		P00006-01	1									
8	Fan Motor Bracket		4A6952-01	1									
8a	Bolt		436206-03	2									
9	Evaporator	**KM-81BAJ**	2A9161G01	1									
		KM-116BAJ	2A9148G01	1									
		KM-161BAJ	2A9133G01	1									
10	Separator	**KM-81BAJ**	250749-02	2									
		KM-116BAJ	250749-01	2									
		KM-161BAJ	250749-03	2									
11	Hot Gas Valve		4A3275-01	1									
12	Coil Valve		384347G01	1									
13	Bolt		4A3277F01	1									
14	High-Pressure Switch	**KM-161BAJ**	463180-02	1									
15	Strainer	**KM-81BAJ**	441569-01	1									
		KM-116BAJ, KM-161BAJ	441569-02	1									
16	Drier	**KM-81BAJ, KM-116BAJ**	P00007-01	1									
		KM-161BAJ	458776-01	1									
17	Accumulator	**KM-81BAJ**	P00010-01	1									
		KM-116BAJ	P00010-02	1									
18	Accumulator Cover	**KM-81BAJ, KM-116BAJ**	7762-3555	1									
19	Thermostatic Expansion Valve	**KM-161BAJ**	P00318-01	1									
20	Thermostatic Expansion Valve Cover	**KM-161BAJ**	369332Z01	1									
21	Thermostatic Expansion Valve Holder	**KM-161BAJ**	451267-01	1									
22	Clamp	**KM-161BAJ**	443461-01	1									
23	Thermistor		P00027-01	1									
24	Thermistor Holder		436455-01	1									
25	Heat Exchanger	**KM-81BAJ**	2A9160G01	1									
		KM-116BAJ	2A9149G01	1									
		KM-161BAJ	2A9134G01	1									

B. Refrigeration Circuit

KM-161BWJ

J-0 to L-0

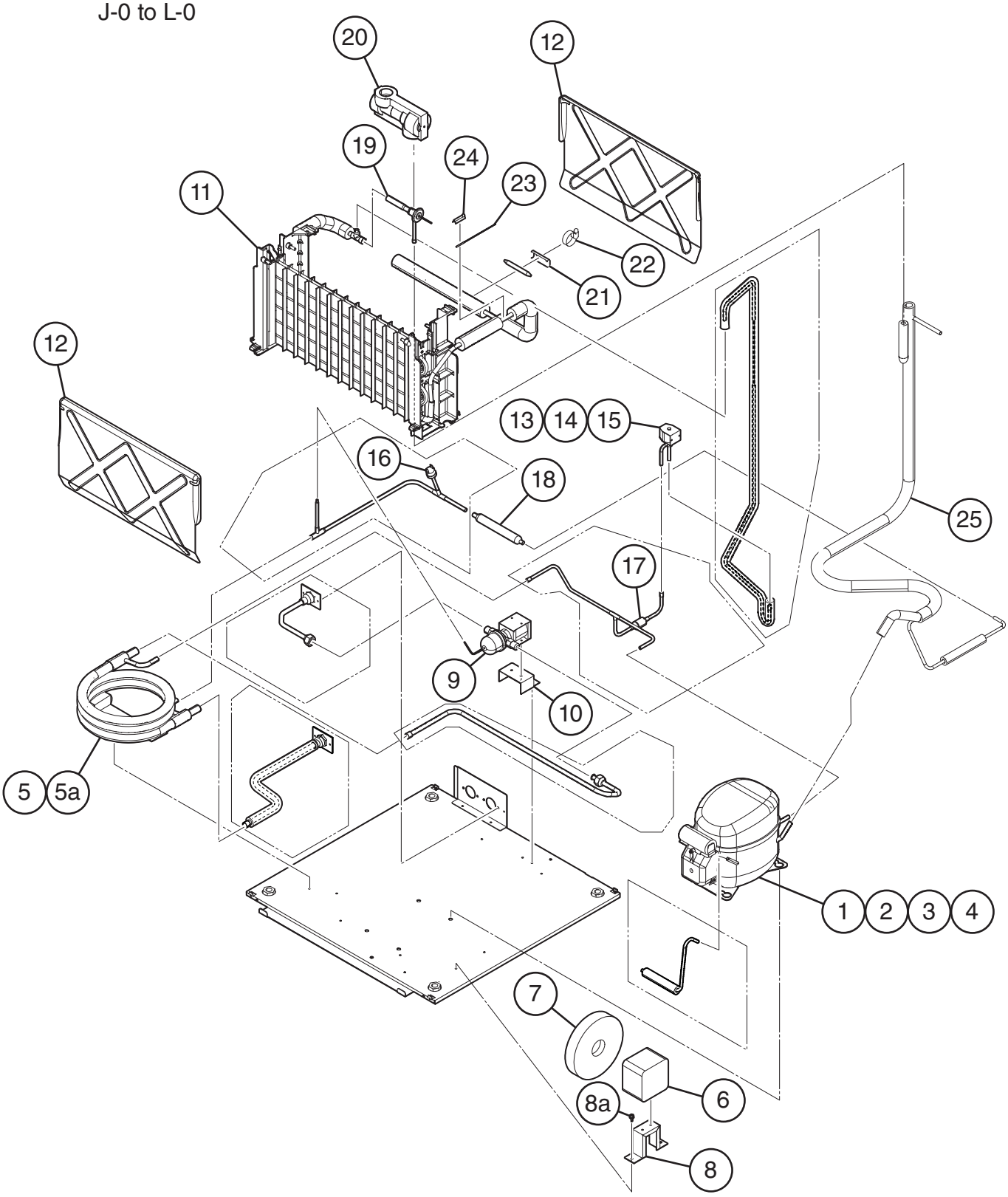

Title: B. Refrigeration Circuit Model: KM-161BWJ													
Index No.	Description	Material or Model Number	Part Number	Required Number									
				J-0 to L-0									
1	Compressor		P04286-01	1									
2	PTC Start Relay		P04291-01	1									
3	Start Capacitor	189-227MFD, 165VAC	P04288-01	1									
4	External Protector		P04290-01	1									
5	Condenser		P01539-01	1									
5a	Flange Bolt		7B0230512	4									
6	Fan Motor		384355G01	1									
7	Fan Blade		P01056-01	1									
8	Fan Motor Bracket		4A6952-01	1									
8a	Bolt		436206-03	2									
9	Water Regulating Valve		P04020-01	1									
10	Water Regulating Valve Bracket		371348M01	1									
11	Evaporator		2A9133G01	1									
12	Separator		250749-03	2									
13	Hot Gas Valve		4A3275-01	1									
14	Coil Valve		384352G01	1									
15	Bolt		4A3277F01	1									
16	High-Pressure Switch		463180-02	1									
17	Strainer		441569-02	1									
18	Drier		458776-01	1									
19	Thermostatic Expansion Valve		P00318-01	1									
20	Thermostatic Expansion Valve Cover		369332Z01	1									
21	Thermostatic Expansion Valve Holder		451267-01	1									
22	Clamp		443461-01	1									
23	Thermistor		P00027-01	1									
24	Thermistor Holder		436455-01	1									
25	Heat Exchanger		2A9140G01	1									

C. Water Circuit

KM-81BAJ, KM-116BAJ, KM-161B_J

J-0 to L-0

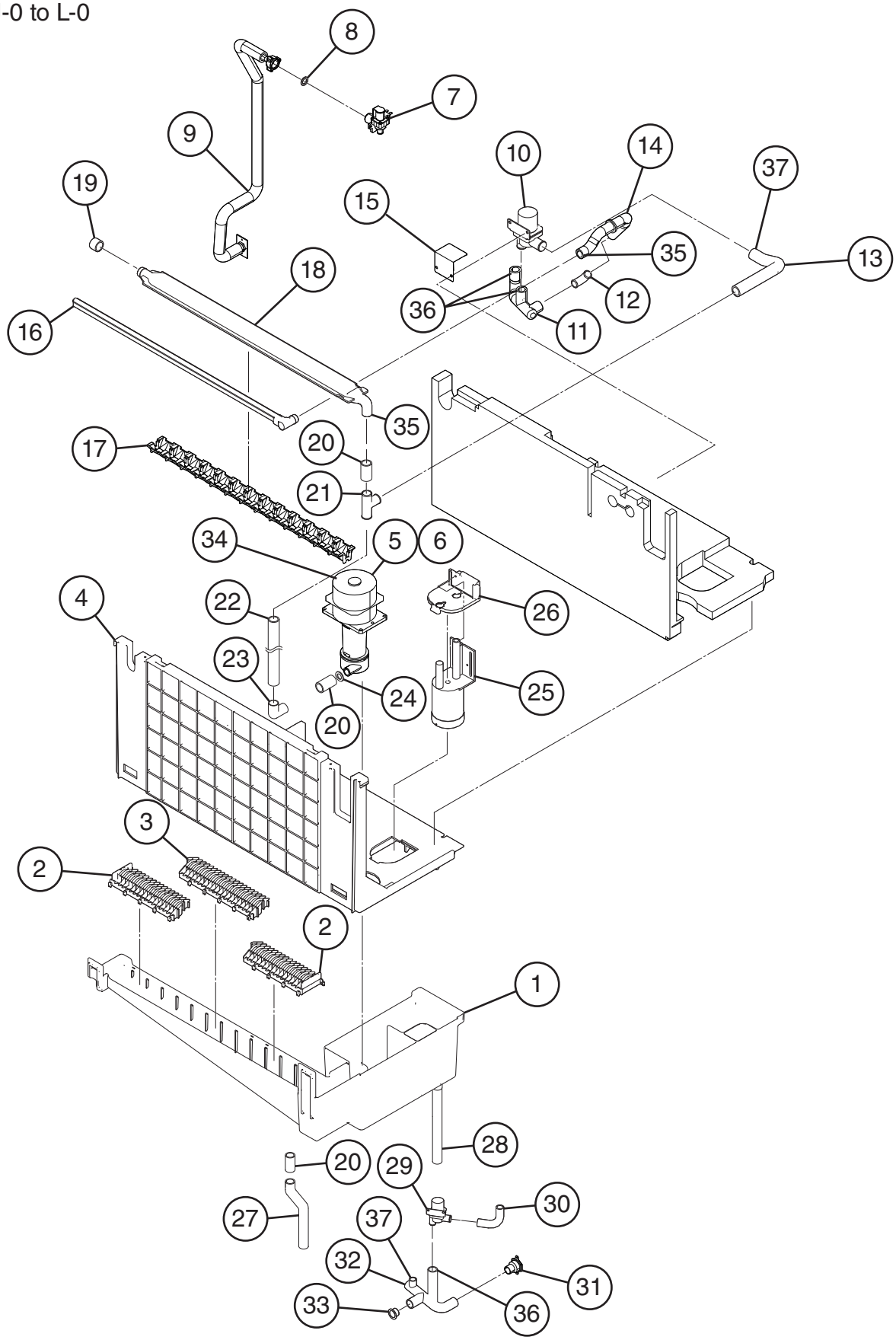

Title: C. Water Circuit Model: KM-81BAJ, KM-116BAJ, KM-161B_J												
Index No.	Description	Material or Model Number	Part Number	Required Number								
				J-0 to K-2	K-3 to L-0							
1	Water Tank	**KM-81BAJ**	117637-01	1	1							
		KM-116BAJ	117638-01	1	1							
		KM-161B_J	117639-01	1	1							
2	Cube Guide A		250742-01	2	2							
3	Cube Guide B	**KM-116BAJ**	250741-01	1	1							
		KM-161B_J	250740-01	1	1							
4	Ice Making Bracket	**KM-81BAJ**	117630-01	1	1							
		KM-116BAJ	117631-01	1	1							
		KM-161B_J	117632-01	1	1							
5	Pump Motor	**KM-81BAJ**	384354G01	1	1							
		KM-116BAJ, KM-161B_J	P00468-01	1	1							
6	Pump Motor Capacitor	1MFD, 400V	4A2128-09	1	1							
7	Inlet Water Valve	**KM-81BAJ, KM-116BAJ**	3U0152-01	1	1							
		KM-161B_J	3U0133-01	1	1							
8	Rubber Gasket		413854-03	1	1							
9	Water Supply Pipe	**KM-81BAJ**	4A6705G01	1	1							
		KM-116BAJ	4A6701G01	1	1							
		KM-161B_J	4A6685G01	1	1							
10	Cleaning Valve		384353G01	1	1							
11	Water Supply Pipe (A)		384395R01	1	1							
12	Elbow		470303-01	1	1							
13	Bypass Hose		374229R01	1	1							
14	Water Supply Pipe (B)		374228R01	1	1							
15	Drain Valve Cover		482837M01	1	1							
16	Water Supply Tube	**KM-81BAJ**	250743-02	1	1							
		KM-116BAJ	250743-01	1	1							
		KM-161B_J	250743-03	1	1							
17	Spray Guide	**KM-81BAJ**	252052P02	1	1							
		KM-116BAJ	252052P01	1	1							
		KM-161B_J	252052P03	1	1							
18	Spray Tube	**KM-81BAJ**	250746-02	1	1							
		KM-116BAJ	250746-01	1	1							
		KM-161B_J	250746-03	1	1							
19	Spray Tube Cap		370777R01	1	1							
20	Silicone Hose	L=90 mm	7730-1519	3	3							
21	Tee		470312-01	1	1							
22	Silicone Hose	L=280 mm	7730-1519	1	1							
23	Elbow		417703-01	1	1							
24	Washer	**KM-81BAJ**	4Y4194P01	1	1							
		KM-116BAJ, KM-161B_J	4Y4194P02	1	1							
25	Float Switch		4A3624-04	1	1							
26	Float Switch Bracket	**KM-161B_J**	368339-01	1	1							

Title: C. Water Circuit Model: KM-81BAJ, KM-116BAJ, KM-161B_J													
Index No.	Description	Material or Model Number	Part Number	Required Number									
				J-0 to K-2	K-3 to L-0								
27	Overflow Pipe	**KM-81BAJ**	369038P01	1	1								
		KM-116BAJ	369038P02	1	1								
		KM-161B_J	369038P03	1	1								
28	Silicone Hose	L=150 mm	7730-1519	1	1								
29	Drain Valve		384352G01	1	1								
30	Drain Valve Hose		470304-01	1	1								
31	Drain Fitting		2A9337G01	1	1								
32	Drain Hose		370704R01	1	1								
33	Drain Cap		472250P01	1	1								
34	Pump Motor Barrier		4A6948-01		1								
Hose Clamps													
35	Hose Clamp	16.5 mm	427443-04	2	2								
36	Hose Clamp	18 mm	427443-05	3	3								
37	Hose Clamp	20 mm	427443-06	2	2								

D. Control Box Assembly

KM-81BAJ, KM-116BAJ, KM-161B_J

J-0 to L-0

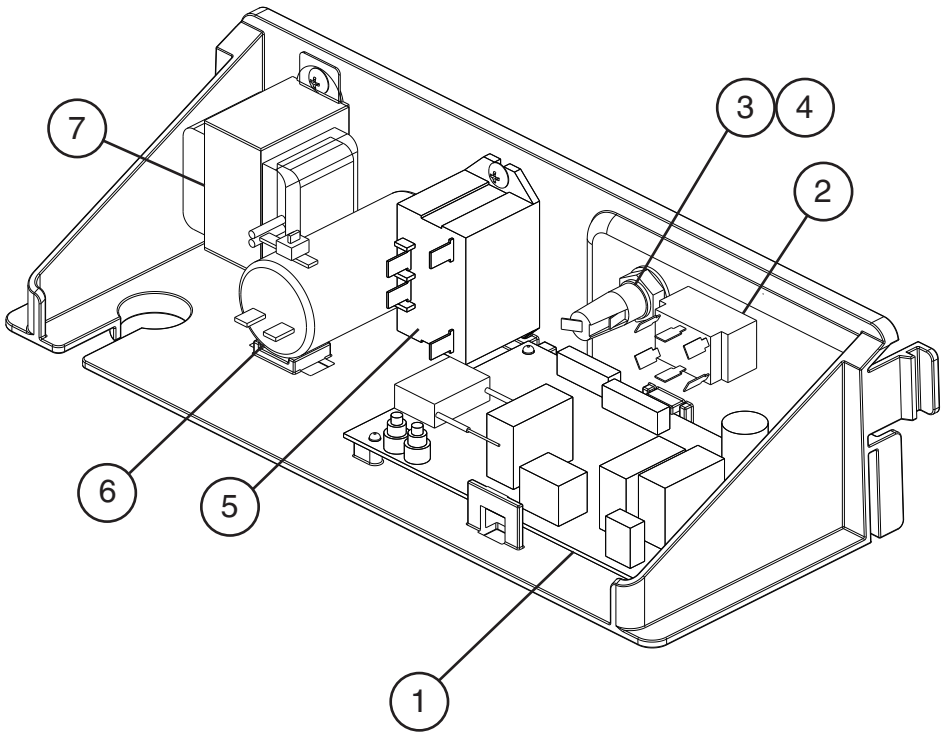

Title: D. Control Box Assembly Model: KM-81BAJ, KM-116BAJ, KM-161B_J												
				Required Number								
Index No.	Description	Material or Model Number	Part Number	J-0 to L-0								
1	Control Board		P01771-02	1								
2	Toggle Switch		P00033-01	1								
3	Fuse Holder		P00014-01	1								
4	Fuse	5A, 250VAC	P01143-01	1								
5	Power Relay	30A	449000-01	1								
6	Start Capacitor	**KM-116BAJ, KM-161BAJ** 100MFD, 160VAC	4Y1175-01	1								
7	Control Transformer		3A4395-01	1								

E. Accessories & Labels

KM-81BAJ, KM-116BAJ, KM-161B_J

J-0 to L-0

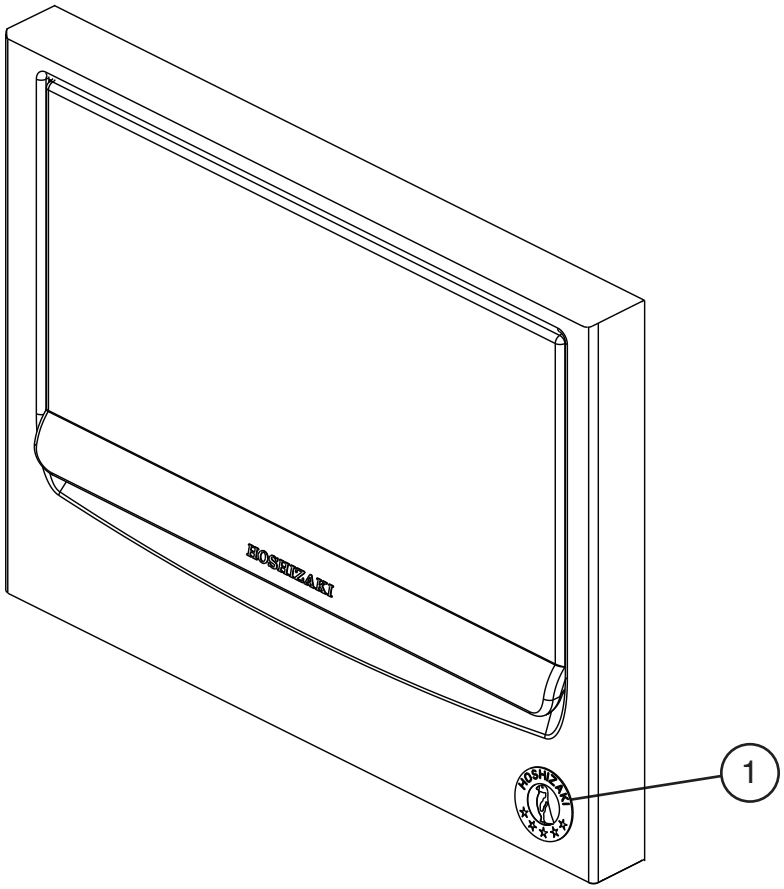

Title: E. Accessories & Labels Model: KM-81BAJ, KM-116BAJ, KM-161BAJ												
Index No.	Description	Material or Model Number	Part Number	Required Number								
				J-0 to L-0								
1	Penguin Label		475552L02	1								
2	Leg		4A2525-01	4								
3	Scoop		1H4123P02	1								