Parts Catalog

GSP30B Label Printing Scale

Label Printing Scale

MODEL: GSP30B

12-01-15
IMPORTANT!
TO EXPEDITE SHIPMENT OF PARTS, ALWAYS SPECIFY MODEL, REV,
PART NUMBER, AND SERIAL NUMBER OF SLICER.

GLOBE FOOD EQUIPMENT COMPANY
2215 East River Road
Dayton, Ohio 45439

Parts Department
Toll Free 1-800-745-6238 • Fax (937) 290-0585
E-Mail: info@globefoodequip.com
Website: www.globefoodequip.com
Not for resale

© Globe Food Equipment Company, 2015

TABLE OF CONTENTS

	Page
GSP30B Scale Assembly	1 - 2
GSP30B Thermal Print Head	3 - 4
GSP30B Wiring Diagram	5

GSP30B Scale Assembly

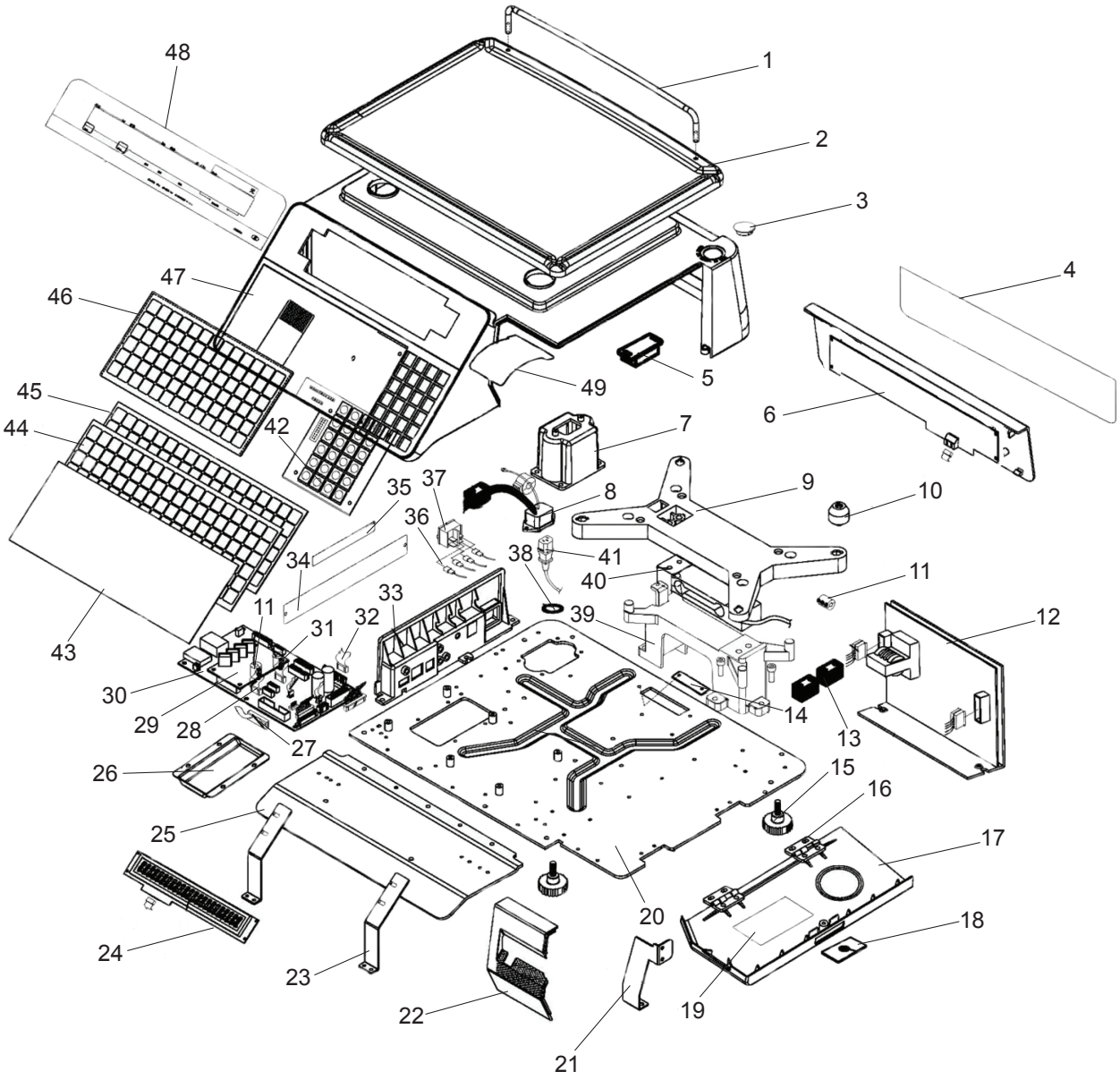

GSP30B Scale Parts List

Item	Description	Part Number	Qty	Hardware
1	Platter Guard	-	1	
2	Platter	E00830	1	
3	Level Bubble Decal	-	1	
4	Display Sheet	-	1	
5	Magnet	-	1	
6	Customer Display	-	1	
7	Power Outlet Support	-	1	
8	C4 Power Harness	-	1	
9	Support Plate	-	1	
10	Rubber Platter Support	E00918	4	
11	Ferrite Core	-	3	
12	Power Supply	-	1	
13	Ferrite Core	-	1	
14	Base Cover Bracket	-	1	
15	Adjustable Foot	E00919	4	
16	Hinge	-	2	
17	Printer Side Cover	-	1	
18	Magnet Bracket	-	1	
19	Printer Decal	-	1	
20	Base Plate	-	1	
21	Print Bracket	-	1	
22	Printer Front Cover	-	1	
23	Front Display Bracket	-	2	
24	LCD Display	-	2	
25	Front Display Base	-	1	
26	Access Cover	-	1	
27	S2 Keyboard Harness	-	1	
28	S2 Display Harness	-	1	
29	A+D Power Board	-	1	
30	Main Power Board	-	1	
31	C3 Display Harness	-	1	
32	S2 Power Harness	-	1	
33	Connector Bracket	-	1	
34	Data Plate	-	1	
35	UNI-3 Sheet	-	1	
36	C3 Power Harness	-	1	
37	Power Switch	E00839	1	
38	Ground Cord Label	-	1	
39	Load Cell Bracket	-	1	
40	Load Cell Assembly	-	1	
41	Power Cord	E00920	1	
42	Numeric Board	-	1	
43	Keyboard Cover	E00825	1	
44	Overlay (w/Blank Keys)	E00826	1	
45	Keyboard Sheet	-	1	
46	Keypad Membrane	E00827	1	
47	Upper Cover	-	1	
48	Operator Display Sheet	-	1	
49	Termal Protector Sheet	-	1	

GSP30B Thermal Print Head Assembly

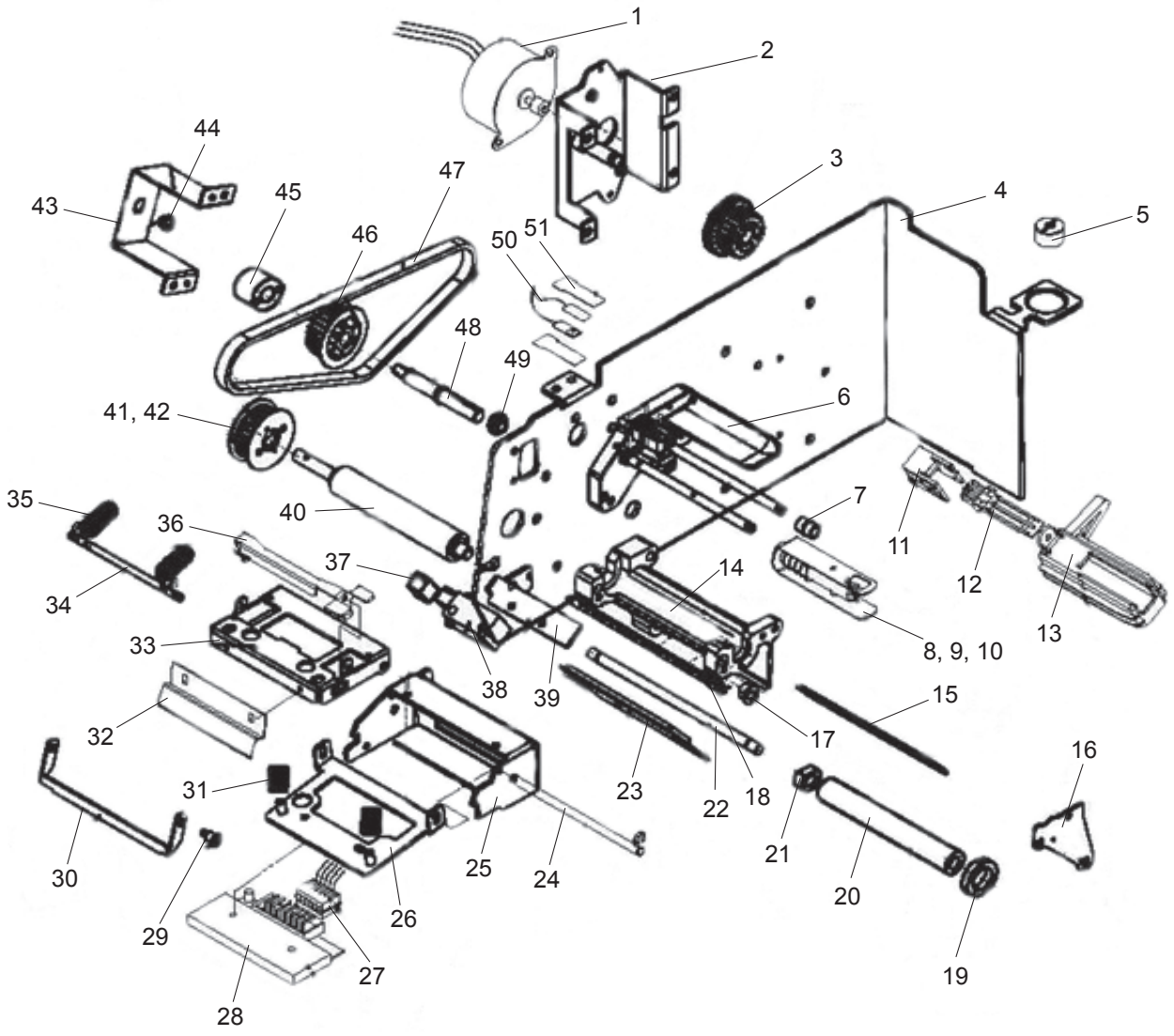

GSP30B Thermal Print Head Parts List

Item	Description	Part Number	Qty	Hardware
1	Stepper Motor	-	1	
2	Motor Bracket	-	1	
3	Stepper Motor Dual Gear	-	1	
4	Printer Frame	-	1	
5	Level Bubble	-	1	
6	Label Support	-	1	
7	Axle Bush	-	16	
8	Bobbin Bracket	-	1	
9	Bobbin Spring	-	1	
10	Bobbin Shaft	-	1	
11	Label Guide Holder	E00867	1	
12	Label Guide Lever	E00868	1	
13	Label Holder	E00914	1	
14	Label Guide	-	1	
15	Fixed Bracket	-	1	
16	Label Guide Cover	-	1	
17	Left Bushing	-	2	
18	Axis (02)	-	1	
19	Label Guide	-	1	
20	POM Shaft	-	1	
21	Bushing	-	1	
22	Axis (01)	-	1	
23	Peel Off Bracket	-	1	
24	Shaft 1	-	1	
25	Print Head Frame	-	1	
26	Print Head Bracket	-	1	
27	S2 Thermal Head Print Harness	-	1	
28	Thermal Print Head Assembly	E00879	1	
29	Cutter Screw	-	2	
30	Cutter Bracket	-	1	
31	Print Head Bracket Tension Spring	-	2	
32	Label Tear Bar	-	1	
33	Print Head Lock Bracket	-	1	
34	Print Head Hold Axis	-	1	
35	Spring Coil	-	2	
36	Print Head Push Bracket	-	1	
37	Peel Sensor Harness	-	1	
38	Reflector Photo Interrupter	-	1	
39	Peel Sensor Bracket	-	1	
40	Rubber Roller	-	1	
41	Drive Gear	-	1	
42	Drive Gear Cover	-	1	
43	Timing Belt Bracket	-	1	
44	Belt Bushing	-	1	
45	Gear Bushing	-	1	
46	Timing Belt Rewind Gear	-	1	
47	Timing Belt	-	1	
48	Timing Belt Rewind Axis	-	1	
49	Belt Bushing	-	1	
50	Label Sensor Assembly	-	1	
51	Sensor Bracket	-	2	
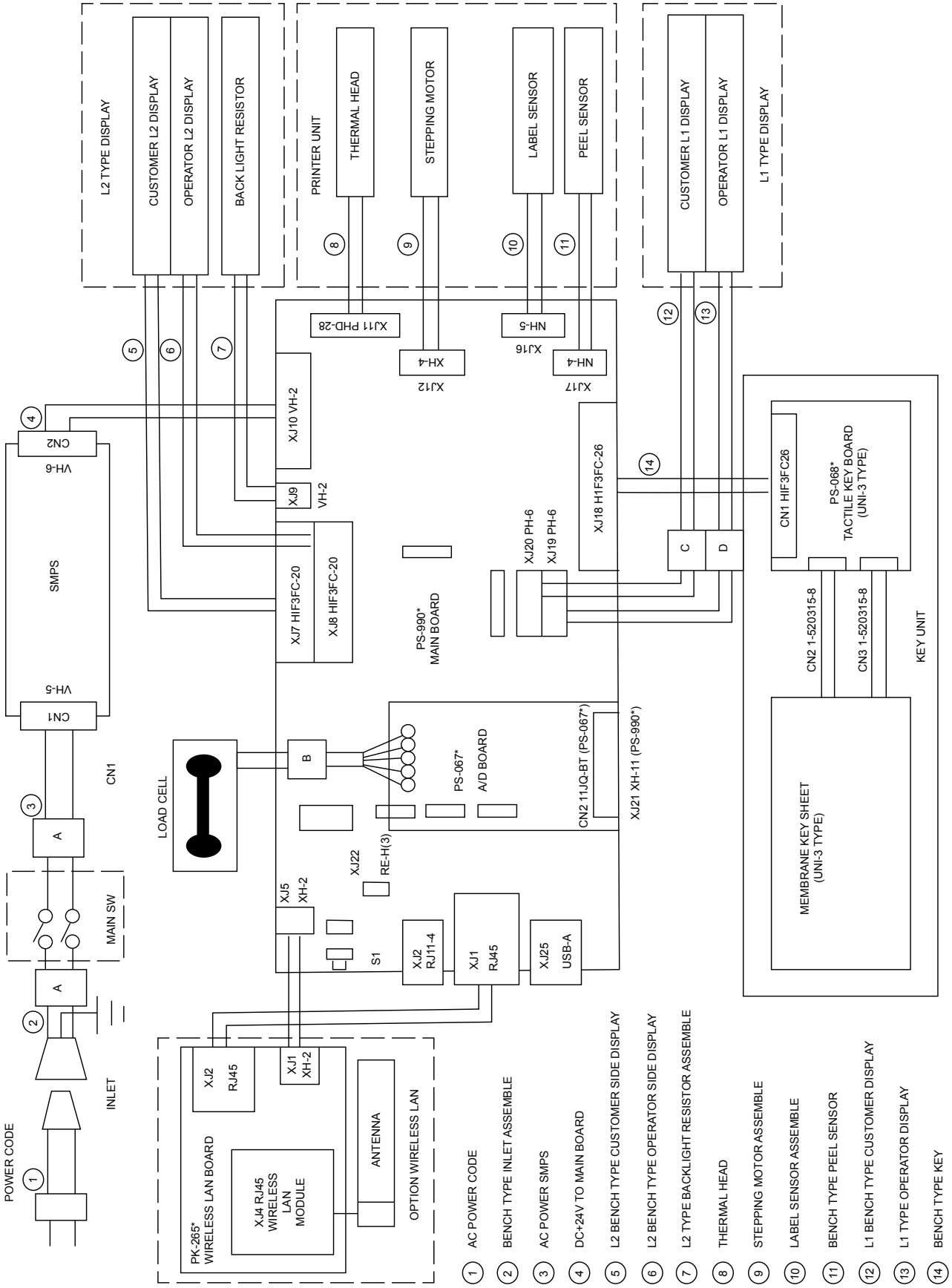
GSP30B Wiring Diagram