Electrolux

Vegetable Slicer
Mightygreen Vegetable Cutter with 4 discs

ITEM #

MODEL #

NAME #

SIS #

AIA #

Vegetable Slicer

Mightygreen Vegetable Cutter with 4 discs

603799 (MIGY4U)	(MIGY4U) Mighty Green Vegetable Cutter, continuous feed design & 3.2 quart bowl with S blade, complete with four blade package, 1/3 HP, 250 watts, 1100 rpm, 115v/60/1-ph, 3.6 amps, NEMA 5-15P (replaces discontinued PNC 603410)

Short Form Specification

Item No.

MIGY4U-Mighty Green Vegetable Cutter, continuous feed design & 3.2 quart bowl with S blade, complete with four blade package, 1/3 HP, 250 watts, 1100 rpm, 115v/60/1, 3.6 amps, NEMA 5-15P (replaces discontinued PNC 603410)

5-15P

APPROVAL:

Main Features

- Vegetable slicer units has slicing, grating and shredding capabilities (no dicing, no french fry cuts).
- Delivered with:
  - All plastic vegetable prep attachment with a half moon hopper and a cylindrical hopper.
  - 4 discs included: TD2 5/64" (2mm) slicing disc, TD5 3/16" (5mm) slicing disc, RD4 5/23" (4mm) grating disc, ED2 5/64" (2mm) shredding disc.
- Round (long vegetables) and half moon feed hoppers.
- Continuous feed model.
- Automatic restart of the machine with the half-moon shaped pusher in position.
- Hopper easily removed for cleaning.
- Magnetic safety system and motor brake. Prevents machine from running when pusher plate swings away or is open.
- Complete selection of stainless steel blades available diameter 6 3/4" (175 mm).
- Capacity up to 200 meals.

Construction

- Power: 1/3 HP—single phase.
- 250 watts motor.
- All polycarbonate plastic hopper and housing.
- Compact and portable design.
- 1 speed: 1800 rpm plate speed.

Included Accessories

• 1 of Slicing Blade, 3/16"	PNC 653001
• 1 of Grating Blade, 1/8"	PNC 653004
• 1 of Julienne Blade, 5/64"	PNC 653171
• 1 of Slicing Blade, 1/16"	PNC 653176

Optional Accessories

• Slicing Blade, 3/16"	PNC 653001 ❑
• Slicing Blade, 9/32"	PNC 653002 ❑
• Grating Blade, 3/32"	PNC 653003 ❑
• Grating Blade, 1/8"	PNC 653004 ❑
• Grating Blade, 1/4"	PNC 653005 ❑
• Julienne Blade, 5/32"	PNC 653006 ❑
• Wavy Blade, 1/16"	PNC 653007 ❑

Electrolux Professional, Inc.
www.electroluxusa.com/professional
10200 David Taylor Drive, Charlotte, NC 28262 • Telephone Number: 866-449-4200 • Fax Number: 704-547-7401

Electrolux
Vegetable Slicer
Mightygreen Vegetable Cutter with 4 discs

• Julienne Blade, 5/64"	PNC 653171 ❑
• Slicing Blade, 1/16"	PNC 653176 ❑
• Slicing Blade, 1/8"	PNC 653177 ❑
• Grating Blade, 5/64"	PNC 653178 ❑

Vegetable Slicer
Mightygreen Vegetable Cutter with 4 discs

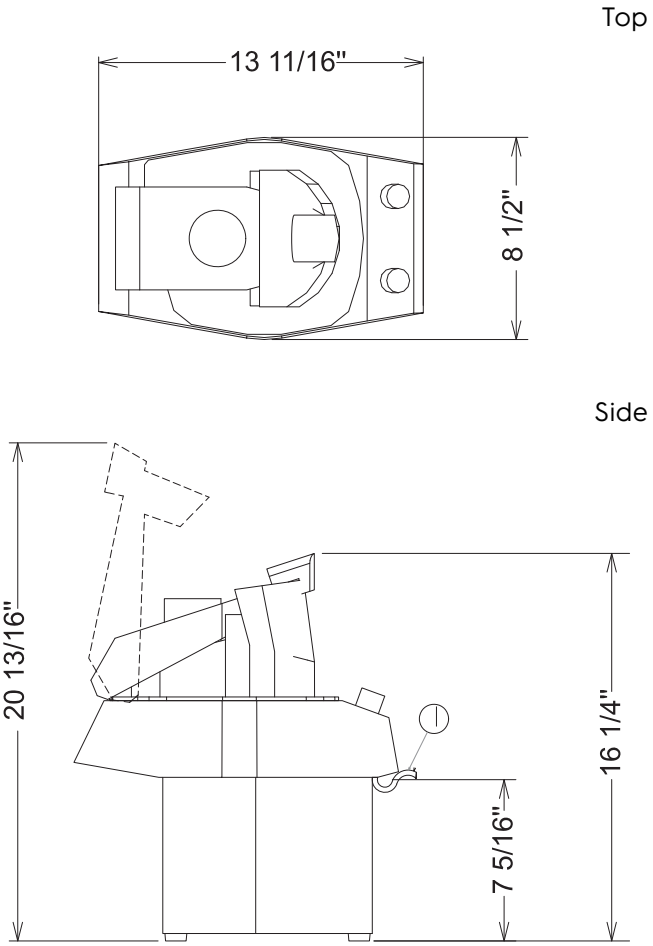

EI = Electrical connection
EQ = Equipotential screw

Electric

Supply voltage:	
603799 (MIGY4U)	115 V/1N ph/60 Hz
Electrical power:	0.25 kW
Total Watts:	0.25 kW

Key Information:

External dimensions, Width:	8 1/2" (216 mm)
External dimensions, Depth:	13 11/16" (347 mm)
External dimensions, Height:	16 1/4" (412 mm)
Shipping width:	10 1/4" (260 mm)
Shipping depth:	15 3/4" (400 mm)
Shipping height:	17 3/4" (450 mm)
Shipping weight:	31 lbs (14 kg)

The company reserves the right to make modifications to the products without prior notice. All information correct at time of printing.

2015.04.28