ALTO-SHAAM

ITEM NO. _____

TY2-72 SERIES
TY2SYS-72 SERIES
HEATED DISPLAY SYSTEMS

TY2-72

TY2SYS-72

ecosmart®

- HALO HEAT ... a controlled, uniform heat source that gently holds and surrounds food for better appearance, taste, and longer holding life.
- Holds and displays hot food fresh and moist for hours — without adding water.
- Expandable system to meet your specific requirements.
- Matches profile of leading refrigerated display case.
- **HOT DISPLAY CASE**
  - — Curved glass styling.
  - — Displays hot food without condensation on glass.
  - — Thermostatically controlled heat source radiates from the base of the display case in multiple heat zones.
  - — Overhead light zones with shatterproof coated bulbs.
  - — Holds a full range of standard (gastronorm) pan sizes, full-size or half-size sheet pans.
  - — Tempered sliding glass doors reflect heat back into the products and mirror the display to enhance merchandising effect.
- **DECORATOR BASE**
  - — Standard black painted front and end panels.
  - — Protected with a environmentally friendly bumper, made of 93% pre-consumer polycarbonate waste and is 100% recyclable.
- **SELF-SERVICE HOT DISPLAY**
  - — Customer self-service opening is available on right side, left side, or across the full length of case.
  - — Front mounted heat-guard provides customer protection.

The display case is constructed of 18 gauge, non-magnetic stainless steel. A tempered glass front encloses the display case and can be lifted to a 90 degree angle for easy cleaning. Removable, sliding glass doors on the operator side are included. Sliding door tracks have a "clean sweep" cutout allowing for easy cleaning and crumb removal. Framed end glass with rubber gasket material protects glass edges from chipping and breakage. The base is divided into two (2) individually managed heat zones with each zone controlled by a separate thermostat with a range of 1 through 10 and heat-on indicator light. Overhead lights are controlled by ON/OFF switches in two (2) light zones. Two (2) 125V plug outlets are available as an option on 120/208-240V units only. Counter-top display cases include one set of 4" (102mm) legs.

- ☐ **TY2-72** - 72" (1829mm) length
- ☐ **TY2SYS-72*** - 72" (1829mm) length, with base
- ☐ **TY2-72/P** - 72" (1829mm) length, 71-5/16" (1811mm) self-service opening across full length of case front
- ☐ **TY2SYS-72/P*** - 72" (1829mm) length, with base, 71-5/16" (1811mm) self-service opening across full length of case front
- ☐ **TY2-72/PL** - 72" (1829mm) length, 23-3/4" (603mm) self-service opening on left side of case front
- ☐ **TY2SYS-72/PL*** - 72" (1829mm) length, 23-3/4" (603mm) with base, self-service opening on left side of case front
- ☐ **TY2-72/PR** - 72" (1829mm) length, 23-3/4" (603mm) self-service opening on right side of case front
- ☐ **TY2SYS-72/PR*** - 72" (1829mm) length, with base, 23-3/4" (603mm) self-service opening on right side of case front

*The system base is not sold as a separate item. Order the full TY2SYS model to receive the base.

c UL us LISTED COOKING APPLIANCE 584m

CLASSIFIED UL EPH ANSI/NSF 4

CE TÜV NORD GS

FACTORY INSTALLED OPTIONS

- Electrical Choices
  - ➥Specify Voltage:
  - ☐ 120/208-240
  - ☐ 230
- Panel Color Choices
  - ➥Specify color:
  - ☐ Black, standard
  - ☐ Stainless Steel, optional
  - ☐ Custom Color, optional
- End Glass Choices
  - ➥Specify choice
  - ☐ Clear Glass, standard
  - ☐ Solar Bronze Glass, optional
- ☐ Temperature Gauge, optional

HALO HEAT

W164 N9221 Water Street • P.O. Box 450 • Menomonee Falls, Wisconsin 53052-0450 • U.S.A.

PHONE: **262.251.3800 800.558.8744** U.S.A./CANADA FAX: **262.251.7067 800.329.8744** U.S.A. ONLY

www.alto-shaam.com

AutoQuotes

TY2-72 SERIES
TY2SYS-72 SERIES
HEATED DISPLAY SYSTEMS

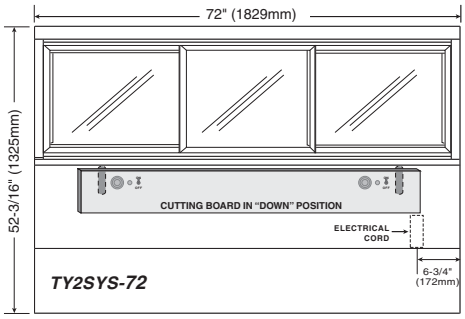

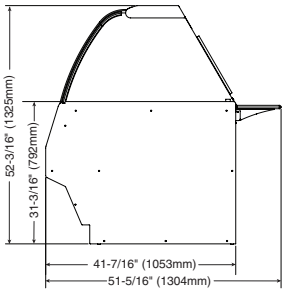

TY2SYS Side Profile

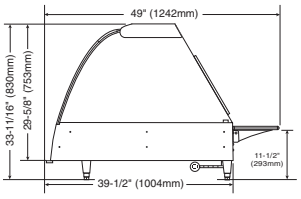

TY2 Side Profile

DIMENSIONS (H X W X D)

EXTERIOR, COUNTER-TOP MODEL WITH LEGS:
33-11/16" x 72" x 49" (830mm x 1829mm x 1242mm)

EXTERIOR, WITH BASE:
52-3/16" x 72" x 51-5/16" (1325mm x 1829mm x 1304mm)

WELL DIMENSIONS (W X L X D):
27-3/16" x 69-5/16" x 4-1/2" (690mm x 1760mm x 114mm)

ELECTRICAL

VOLTAGE	PHASE	CYCLE/HZ	AMPS	kW	
120/208-240 (AGY)	1	50/60	18.75	4.5	NEMA L14-30P 30A, 250V PLUG
at 208	1	50/60	19.0	4.6	
at 240	1	50/60	19.0	4.6	
230 (AGY)	1	50/60	18.3	4.2	BARE END, NO PLUG
230	1	50/60	18.4	4.2	

PAN CONFIGURATION*

PAN SIZE	DIMENSIONS	QTY.
FULL-SIZE & ONE-THIRD**:	12" x 20" x 2-1/2" (GN 1/1)	5
	12" x 6" x 2-1/2" (GN 1/3)	5
HALF-SIZE & ONE-THIRD**:	12" x 10" x 2-1/2" (GN 1/2)	10
	12" x 6" x 2-1/2" (GN 1/3)	5
FULL-SIZE SHEET PANS:	18" x 26" x 1"	3
MAX. CAPACITY/VOLUME:	80 lbs (36 kg) 50 qts (60 L)	

* Pans are not included with display case.
** Will also accept 4" (100mm) deep pans.

INSTALLATION REQUIREMENTS

Display case must be installed level. The display case must not be installed in any area where it may be affected by steam, grease, dripping water, high temperatures, or any other severely adverse conditions.

Do not install a heated display case near a cold air source such as a freezer, air conditioning vents, or in any area where outside air fluctuation can affect performance.

WEIGHT

MODEL	NET	SHIP
TY2-72	385 lb (175 kg)	600 lb (272 kg)
TY2SYS-72	621 lb (282 kg)	721 lb (327 kg)
TY2-72/P	360 lb (163 kg)	575 lb (261 kg)
TY2SYS-72/P	660 lb (299 kg)	760 lb (345 kg)
TY2-72/PL; /PR	435 lb (197 kg)	650 lb (295 kg)
TY2SYS-72/PL; /PR	700 lb (318 kg)	800 lb (363 kg)

CRATED DIMENSIONS: L X W X H
TY2-72: 80" x 50" x 45" (2032mm x 1270mm x 1143mm)
TY2SYS-72: 80" x 50" x 60" (2032mm x 1270mm x 1524mm)

SPECIFICATIONS

- Ten (10) overhead lights with two (2) light zones.
- Two (2) base heat zones with two (2) adjustable thermostats with a range of 1 through 10, and two (2) heat-on indicator lights.
- Three (3) tinted, reflective, tempered glass sliding doors on operator side.
- One (1) 10" x 60" (254mm x 1524mm) operator-side work shelf.
- Self-serve model TY2-72/P has a self-serve pan insert 26-7/16" x 69-3/16" x 2" (672mm x 1757mm x 51mm) and includes three (3) Wire Pan Grids.
- Self-serve models TY2-72/PL and TY2-72/PR have a self-serve pan insert 21-5/8" x 26-7/16" x 2" (549mm x 672mm x 51mm) and includes one (1) Wire Pan Grid.

FACTORY INTALLED OPTIONS

☐ INDEPENDENT ELECTRICAL OUTLET	5001781	☐ TEMPERATURE PROBE	5004917

ACCESSORIES

☐ BUTTING KIT (SEAMLESSLY CONNECT MULTIPLE SYSTEMS)	5009001	SHEET PAN DIVIDER BAR PACKAGE ☐ FULL-SERVICE ☐ SELF-SERVICE LEFT-SIDE OR RIGHT-SIDE OF CASES	 5002803 5002804
☐ CARVING STATION	5001874		
☐ PAN INSERT, SELF-SERVICE 4" (102mm) DEEP	1001990	☐ THERMOSTAT GUARD COVER PLATE	5007660
☐ PLATFORM SCALE	55265	☐ WORK SHELF WITH GRAVY LANE	5005639

ALTO-SHAAM

W164 N9221 Water Street • P.O. Box 450 • Menomonee Falls, Wisconsin 53052-0450 • U.S.A.
PHONE: 262.251.3800 800.558.8744 U.S.A./CANADA FAX: 262.251.7067 800.329.8744 U.S.A. ONLY
www.alto-shaam.com

DUE TO ONGOING PRODUCT IMPROVEMENT, SPECIFICATIONS ARE SUBJECT TO CHANGE WITHOUT NOTICE.

PRINTED IN U.S.A.