3 1/2 QUART WARMERS

MODEL
3W SERIES

Installation and Operation Instructions

2M-Y8316 Rev. L 6/30/2008

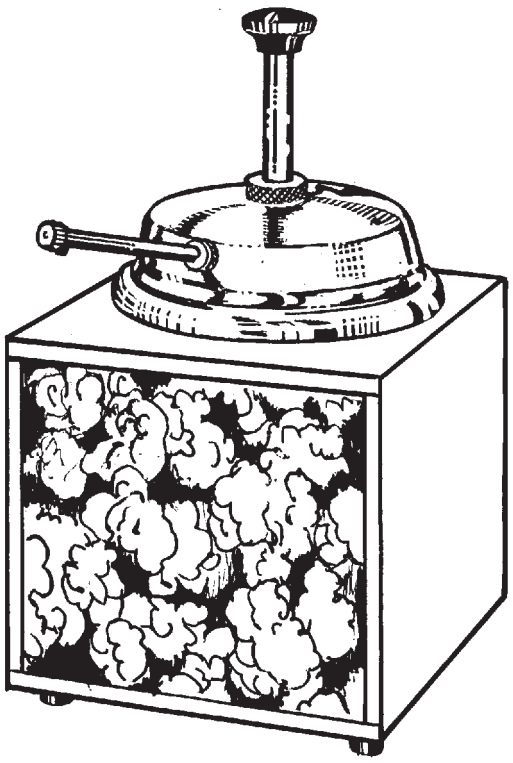

3WLA-B

SAFETY SYMBOL

These symbols are intended to alert the user to the presence of important operating and maintenance instructions in the manual accompanying the appliance.

RETAIN THIS MANUAL FOR FUTURE REFERENCE

NOTICE

Using any part other than genuine Star factory supplied parts relieves the manufacturer of all liability.

Star reserves the right to change specifications and product design without notice. Such revisions do not entitle the buyer to corresponding changes, improvements, additions or replacements for previously purchased equipment.

Due to periodic changes in designs, methods, procedures, policies and regulations, the specifications contained in this sheet are subject to change without notice. While Star Manufacturing exercises good faith efforts to provide information that is accurate, we are not responsible for errors or omissions in information provided or conclusions reached as a result of using the specifications. By using the information provided, the user assumes all risks in connection with such use.

MAINTENANCE AND REPAIRS

Contact your local authorized service agent for service or required maintenance. Please record the model number, serial number, voltage and purchase date in the area below and have it ready when you call to ensure faster service.

Model No. _____

Serial No. _____

Voltage _____

Purchase Date _____

Authorized Service Agent

Reference the listing provided with the unit

or

for an updated listing go to:

Website: www.star-mfg.com
E-mail Service@star-mfg.com
Telephone: (800) 807-9054 Local (314) 781-2777

The Star Service Help Desk

Business Hours: 8:00 am to 4:30 p.m. Central Standard Time

Telephone: (800) 807-9054 Local (314) 781-2777

Fax: (800) 396-2677 Local (314) 781-2714

E-mail Parts@star-mfg.com
Service@star-mfg.com
Warranty@star-mfg.com

Website: www.star-mfg.com

Mailing Address: Star Manufacturing International Inc.
10 Sunnen Drive
St. Louis, MO 63143
U.S.A

SPECIFICATIONS:

MODEL 3WSA-HS 120V - STAINLESS STEEL WITH PUMP and HEATED SPOUT

Capacity: 3-1/2 quarts
Electrical: 120V; 50/60 cycle; single phase; 515wt; 4.3a.
Dimensions: 10-1/2" D x 9" W x 15-1/2" H
Net Weight: 11 lbs.

MODEL 3WSA-P 120V - STAINLESS STEEL WITH PUMP

Capacity: 3-1/2 quarts
Electrical: 120V; 50/60 cycle; single phase; 500wt; 4.2a.
Dimensions: 10-1/2" D x 9" W x 15-1/2" H
Net Weight: 10.5 lbs.

MODEL 3WLA-W 120V - LIGHTED, INCLUDES "N", "BQ", "C", "CD", "F", and "S" SIGNS (INSET WITH COVER SSB-4 or SSB-4H, and LADLE - OPTIONAL)

Capacity: 3-1/2 quarts
Electrical: 120V; 50/60 cycle; single phase; 530wt; 4.4a.
Dimensions: 10-1/2" D x 9" W x 12-3/4" H
Net Weight: 10.5 lbs.

MODEL 3WLA-NP, -FP 120V - LIGHTED WITH PUMP and SIGN: N* or F*

Capacity: 3-1/2 quarts
Electrical: 120V; 50/60 cycle; single phase; 530wt; 4.4a.
Dimensions: 10-1/2" D x 9" W x 15-1/2" H
Net Weight: 10.5 lbs.

MODEL 3WLA-B 120V - LIGHTED WITH BUTTER PUMP and GOLDEN FLAVOR POPCORN SIGN

Capacity: 3-1/2 quarts
Electrical: 120V; 50/60 cycle; single phase; 530wt; 4.4a.
Dimensions: 10-1/2" D x 9" W x 15-1/2" H
Net Weight: 10.5 lbs.

MODEL 3WSA-W 120V - STAINLESS STEEL, (INSET WITH COVER SSB-4 OR SSB-4H, and LADLE - OPTIONAL)

Capacity: 3-1/2 quarts
Electrical: 120V; 50/60 cycle; single phase; 500wt; 4.2a.
Dimensions: 10-1/2" D x 9" W x 12-3/4" H
Net Weight: 10.5 lbs.

MODEL 3WLA-NHS, -CDHS 120V - LIGHTED WITH NACHO or CHILI SIGN WITH PUMP and HEATED SPOUT

Capacity: 3-1/2 quarts
Electrical: 120V; 50/60 cycle; single phase; 545wt; 4.5a.
Dimensions: 10-1/2" D x 9" W x 15-1/2" H
Net Weight: 11 lbs.

MODEL 3WSA-HS 240V - STAINLESS STEEL WITH PUMP and HEATED SPOUT

Capacity: 3-1/2 quarts
Electrical: 240V; 50/60 cycle; single phase; 473wt;2.1a.
Dimensions: 10-1/2" D x 9" W x 15-1/2" H
Net Weight: 11 lbs.

MODEL 3WSA-P 240V - STAINLESS STEEL WITH PUMP

Capacity: 3-1/2 quarts
Electrical: 240V; 50/60 cycle; single phase; 460wt; 2a.
Dimensions: 10-1/2" D x 9" W x 15-1/2" H
Net Weight: 10.5 lbs.

MODEL 3WSA-B 240V - STAINLESS STEEL WITH BUTTER PUMP

Capacity: 3-1/2 quarts
Electrical: 240V; 50/60 cycle; single phase; 460wt; 2a.
Dimensions: 10-1/2" D x 9" W x 15-1/2" H
Net Weight: 10.5 lbs.

MODEL 3WLA-P 240V - LIGHTED WITH PUMP and N* and F* SIGNS

Capacity: 3-1/2 quarts
Electrical: 240V; 50/60 cycle; single phase; 487wt; 2.1a.
Dimensions: 10-1/2" D x 9" W x 15-1/2" H
Net Weight: 10.5 lbs.

MODEL 3WLA-B 240V- LIGHTED WITH BUTTER PUMP and GOLDEN FLAVOR POPCORN SIGN

Capacity: 3-1/2 quarts
Electrical: 240V; 50/60 cycle; single phase; 487wt; 2.1a.
Dimensions: 10-1/2" D x 9" W x 15-1/2" H
Net Weight: 10.5 lbs.

MODEL 3WLA-HS-240V - LIGHTED WITH PUMP and HEATED SPOUT and N* and CD* SIGNS

Capacity: 3-1/2 quarts
Electrical: 240V; 50/60 cycle; single phase; 501wt; 2.2a.
Dimensions: 10-1/2" D x 9" W x 15-1/2" H
Net Weight: 11 lbs.

MODEL 3WSA-4H 120V - STAINLESS STEEL WITH INSET and COVER

Capacity: 4-1/8 quarts
Electrical: 120V; 50/60 cycle; single phase; 500wt; 4.2a.
Dimensions: 11" D x 9" W x 11 3/4" H
Net Weight: 11 lbs.

MODEL 3WLA-4H 120V - LIGHTED WITH INSET and COVER and 6* SIGNS

Capacity: 4-1/8 quarts
Electrical: 120V; 50/60 cycle; single phase; 530wt; 4.4a.
Dimensions: 11" D x 9" W x 11 3/4" H
Net Weight: 11 lbs.

MODEL 3WSA-4H 240V - STAINLESS STEEL WITH INSET and COVER

Capacity: 4-1/8 quarts
Electrical: 240V; 50/60 cycle; single phase; 460wt; 2a.
Dimensions: 11" D x 9" W x 11 3/4" H
Net Weight: 11 lbs.

MODEL 3WLA-4H 240V - LIGHTED WITH INSET and COVER and 6* SIGNS

Capacity: 4-1/8 quarts
Electrical: 240V; 50/60 cycle; single phase; 487wt; 2.1a.
Dimensions: 11" D x 9" W x 11 3/4" H
Net Weight: 11 lbs.

MODEL 3WLA-BQR 120V - LIGHTED (NO SIGNS)

Capacity: 3-1/2 quarts
Electrical: 120V; 50/60 cycle; single phase; 530wt; 4.4a.
Dimensions: 10-1/2" D x 9" W x 11 3/4" H
Net Weight: 11 lbs.

MODEL 3WLA-BQ*, -C*, -CD*, -F*, -N* -120V - LIGHTED WITH SIGN

Capacity: 4-1/8 quarts
Electrical: 120V; 50/60 cycle; single phase; 530wt; 4.4a.
Dimensions: 10-1/2" D x 9" W x 12-3/4" H
Net Weight: 11 lbs.

MODEL 3WLA-W 240V LIGHTED INCLUDES 6* SIGNS (INSET WITH COVER SSB-4 OR SSB-4H, AND LADLE - OPTIONAL)

Capacity: 4-1/8 quarts
Electrical: 240V; 50/60 cycle; single phase; 487wt; 2.1a.
Dimensions: 10-1/2" D x 9" W x 12-3/4" H
Net Weight: 11 lbs.

MODEL 3WSA-W 240V STAINLESS STEEL (INSET WITH COVER SSB-4 OR SSB-4H, AND LADLE - OPTIONAL)

Capacity: 4-1/8 quarts
Electrical: 240V; 50/60 cycle; single phase; 460wt; 2a.
Dimensions: 10-1/2" D x 9" W x 12-3/4" H
Net Weight: 11 lbs.

NOTES:

Bowl 3QT, SSB - OPTIONAL FOR ALL MODELS

* N = Nacho Sign, F = Fudge Sign, CD = Chili Dog Sign, BQ = BBQ Sign, C = Chili Sign, S = Soup Sign

CAUTION

This equipment is designed and sold for commercial use only by personnel trained and experienced in its operation and is not sold for consumer use in and around the home nor for use directly by the general public in food service locations.

Before using your new equipment, read and understand all the instructions & labels associated with the unit prior to putting it into operation. Make sure all people associated with its use understand the units operation & safety before they use the unit.

All shipping containers should be checked for freight damage both visible and concealed. This unit has been tested and carefully packaged to insure delivery of your unit in perfect condition. If equipment is received in damaged condition, either apparent or concealed, a claim must be made with the delivering carrier.

Concealed damage or loss - if damage or loss is not apparent until after equipment is unpacked, a request for inspection of concealed damage must be made with carrier within 15 days. Be certain to retain all contents plus external and internal packaging materials for inspection. The carrier will make an inspection and will supply necessary claim forms.

INSTALLATION

These food warmers are equipped for the voltage and wattage indicated on the nameplate mounted to the bottom panel and are designed for use on alternating current (AC) only.

WARNING

DO NOT CONNECT TO DIRECT CURRENT (DC).

GENERAL OPERATING INSTRUCTIONS

These warmers are designed to use a 3-1/2 quart capacity stainless steel bowl ("SSB") or with 4-1/8 quart insets (SSB-4 or SSB-4H) or a #10 can.

Follow these simple steps for setting up the warmer:

1. Fill the warmer bowl with one and a third quarts of hot water.
2. Place spacer into bowl.
   NOTE: Use 11/16" high spacer for the pump model. Use 1" high spacer (tips up) for SSB-4 or SSB-4H inset. Use 1" high spacer (tips down) for Polar Ware insets (SSB).
3. Turn warmer on.
4. Place bowl or can with food product into the water bowl.
5. On pump model, pre-heat fudge or cheese before inserting pump.
   Pump will not function if fudge or cheese is too thick.
6. Place lid over inset, or close cover on hinged inset, or place pump into fudge or cheese.
   After placing pump turn it to engage into the heated spout.
7. Because the consistency of different foods varies, and because liquids and solids absorb heat at different rates, it is impractical to specify an exact dial setting. However, at the point between figures "3" and "4" the temperature is approximately 145° F, the proper holding temperature for fudge. When the dial is set at the figure "5" the temperature is approximately 170° F, a good holding temperature for cheese sauce. After pre-heating, set the thermostat to the desired temperature.
8. Turn the control knob to the extreme left position "LOW" when not in use.
9. Do not keep unit on high heat for more than 45 minutes, as the food product may become overheated.

CAUTION

DO NOT TOUCH THE HEATED SPOUT WITHOUT HEAT INSULATING MITTENS OR OTHER MEANS OF BURN PREVENTION.

DO NOT OPERATE UNIT WITHOUT WATER. CHECK WATER LEVEL FREQUENTLY.

CLEANING INSTRUCTIONS

IMPORTANT

Stainless steel may corrode if not cleaned properly.

Clean and dry the heated bowl inside the warmer every night. Use a soft cloth and mild soap to keep exterior surfaces bright and shining. To keep the inside surface of the bowl clean, use steel wool pads as often as necessary. Do not use detergents, strong abrasives or metal scouring pads on exterior surface of warmer.

CAUTION

DO NOT IMMERSE IN WATER AT ANY TIME.

PUMP CLEANING

Before using and at least daily, disassemble the pump and wash all parts.

To disassemble pump:

1. Unscrew nut-cylinder. Pull pump-plunger from pump chamber.
2. Unscrew knob from plunger assembly and disassemble.
3. Unscrew cap-tube and nut-sleeve-tube from dispense tube. Remove cover from pump assembly.
4. Remove pin "U" from pump assembly and disengage dispense tube from pump chamber.
5. Remove balls from pump chamber.
6. Wash all parts thoroughly in hot soapy water and rinse thoroughly. Use 18" long brush to clean inside of dispensing tube. Reassemble pump. When reassembling pump, wet O-ring with edible vegetable oil, then reassemble. Make sure all parts are in their proper place.

SANITIZING PUMP ASSEMBLIES

It is recommended that the pump assembly be sanitized after routine disassembly and cleaning. Prepare a 200 ppm four part solution (similar to Pro-Quat 103). Immerse all pump parts in this solution for at least 60 seconds, remove and let air dry. Reassemble the pump.

PRIMING PUMP

Three (3) strokes of the pump plunger are necessary to initially prime and vend thick food products.

If pump does not dispense product properly, remove plunger assembly from pump and make sure the plunger O-ring is in place on the pump plunger. If the O-ring is missing disassemble the pump parts and make certain the O-ring is not in the pump plunger tube, pump chambers or vend tube before replacing O-ring.

CAUTION

FAILURE TO DO THIS CAN CAUSE A BROKEN O-RING TO BE PUMPED OUT WITH THE FOOD BEING VENDED.

SIGN REPLACEMENT

1. Unplug cord from the receptacle.
2. Push front plastic panel up using a plastic pin or very small screwdriver.
3. Pull forward on the bottom edge of the plastic panel and remove it.
4. Replace the sign.
5. Place the front plastic panel back into itsoriginal position.

LIGHT BULB REPLACEMENT

1. Unplug cord from the receptacle.
2. Remove both front panels as stated above.
3. Replace bulbs with a 10 or 15 watt candelabra base for 120V or a 10 watt medium base for 240V.

MAINTENANCE AND REPAIRS

Contact the factory, a service representative or a local service company for service or required maintenance.

THOROUGHLY INSPECT YOUR UNIT ON ARRIVAL

This unit has been tested for proper operation before leaving our plant to insure delivery of your unit in perfect condition. However, there are instances in which the unit may be damaged in transit. In the event you discover any type of damage to your product upon receipt, you must immediately contact the transportation company who delivered the item to you and initiate your claim with same. If this procedure is not followed, it may affect the warranty status of the unit.

LIMITED EQUIPMENT WARRANTY

All workmanship and material in Star products have a one (1) year limited warranty on parts & labor in the United States and Canada. Such warranty is limited to the original purchaser only and shall be effective from the date the equipment is placed in service. Star's obligation under this warranty is limited to the repair of defects without charge, by the factory authorized service agency or one of its sub-agencies. Models that are considered portable ***(see below)*** should be taken to the closest Star service agency, transportation prepaid.

> Star will not assume any responsibility for loss of revenue.

> On all shipments outside the United States and Canada, see International Warranty.

***** The warranty period for the JetStar six (6) ounce & Super JetStar eight (8) ounce series popcorn machines is two (2) years.

***** The warranty period for the Chrome-Max Griddles is five (5) years on the griddle surface. See detailed warranty provided with unit.

***** The warranty period for Teflon/Dura-Tec coatings is one year under normal use and reasonable care. This warranty does not apply if damage occurs to Teflon/Dura-Tec coatings from improper cleaning, maintenance, use of metallic utensils, or abrasive cleaners, abrasive pads, product identifiers and point-of-sale attachments, or any other non-food object tha comes in continuous contact with the roller coating. This warranty does not apply to the "non-stick" properties of such materials.

> This warranty does not apply to "Special Products" but to regular catalog items only. Star's warranty on "Special Products" is six (6) months on parts and ninety (90) days on labor.

> This warranty does not apply to any item that is disassembled or tampered with for any purpose other than repair by a Star Authorized Service Center or the Service Center's sub-agency.

> This warranty does not apply if damage occurs from improper installation, misuse, wrong voltage, wrong gas or operated contrary to the Installation and Operating instructions.

> This warranty is not valid on Conveyor Ovens ***unless*** a "start-up/check-out" has been performed by a Factory Authorized Technician.

PARTS WARRANTY

Parts that are sold to repair out of warranty equipment are warranted for ninety (90) days. The part only is warranted. Labor to replace the part is chargeable to the customer.

SERVICES NOT COVERED BY WARRANTY

1. Travel time and mileage rendered beyond the 50 mile radius limit
2. Mileage and travel time on portable equipment ***(see below)***
3. Labor to replace such items that can be replaced easily during a daily cleaning routine, ie; removable kettles on fryers, knobs, grease drawers on griddles, etc.
4. Installation of equipment
5. Damages due to improper installation
6. Damages from abuse or misuse
7. Operated contrary to the Operating and Installation Instructions
8. Cleaning of equipment
9. Seasoning of griddle plates
10. Voltage conversions
11. Gas conversions
12. Pilot light adjustment
13. Miscellaneous adjustments
14. Thermostat calibration and by-pass adjustment
15. Resetting of circuit breakers or safety controls or reset buttons
16. Replacement of bulbs
17. Replacement of fuses
18. Repair of damage created during transit, delivery, & installation OR created by acts of God

PORTABLE EQUIPMENT

Star will not honor service bills that include travel time and mileage charges for servicing any products considered "Portable" including items listed below. These products should be taken to the Service Agency for repair:

***** The Model 510FD Fryer.
***** The Model 526TOA Toaster Oven.
***** The Model J4R, 4 oz. Popcorn Machine.
***** The Model 518CMA & 526CMA Cheese Melter.
***** The Model 12MC & 15MC & 18MCP Hot Food Merchandisers.
***** The Model 12NCPW & 15NCPW Nacho Chip/Popcorn Warmer.
***** All Hot Dog Equipment **except Roller Grills & Drawer Bun Warmers.**
***** All Nacho Cheese Warmers **except Model 11WLA Series Nacho Cheese Warmer.**
***** All Condiment Dispensers **except the Model HPD & SPD Series Dispenser.**
***** All Specialty Food Warmers **except Model 130R, 11RW Series, and 11WSA Series.**
***** All QCS/RCS Series Toasters **except Model QCS3 & RCS3 Series.**

ALL:
***** Pop-Up Toasters
***** Butter Dispensers
***** Pretzel Merchandisers **(Model 16PD-A Only)**
***** Pastry Display Cabinets
***** Nacho Chip Merchandisers
***** Accessories of any kind
***** Sneeze Guards
***** Pizza Ovens **(Model PO12 Only)**
***** Heat Lamps
***** Pumps-Manual

The foregoing warranty is in lieu of any and all other warranties expressed or implied and constitutes the entire warranty.

FOR ASSISTANCE

Should you need any assistance regarding the Operation or Maintenance of any Star equipment; write, phone, fax or email our Service Department. In all correspondence mention the Model number and the Serial number of your unit, and the voltage or type of gas you are using.

Part# 2M-4497-2 12/06 RMS

MATERIAL	FINISH	MODEL NO.	PART NO.
~	~	3W-	SK1220

DR.M.P.	CK.	DATE 5/28/92

LIMITS UNLESS OTHERWISE NOTED
FRACTIONS 1/64 DECIMALS .005 ±

STAR MFG. INTERNATIONAL, INC.
10 SUNNEN DRIVE ST. LOUIS, MO 63143

TITLE **WIRING DIAGRAM**

CHANGES				LTR	DATE	CHANGE	DR
B	01-12-99	ADDED HIGH LIMIT THERMOSTAT	MP	-	02-18-93	RELEASED FOR PRODUCTION	MP
				A	03-03-93	ADDED VIEW FROM TERMINAL SIDE OF SWITCH	MP

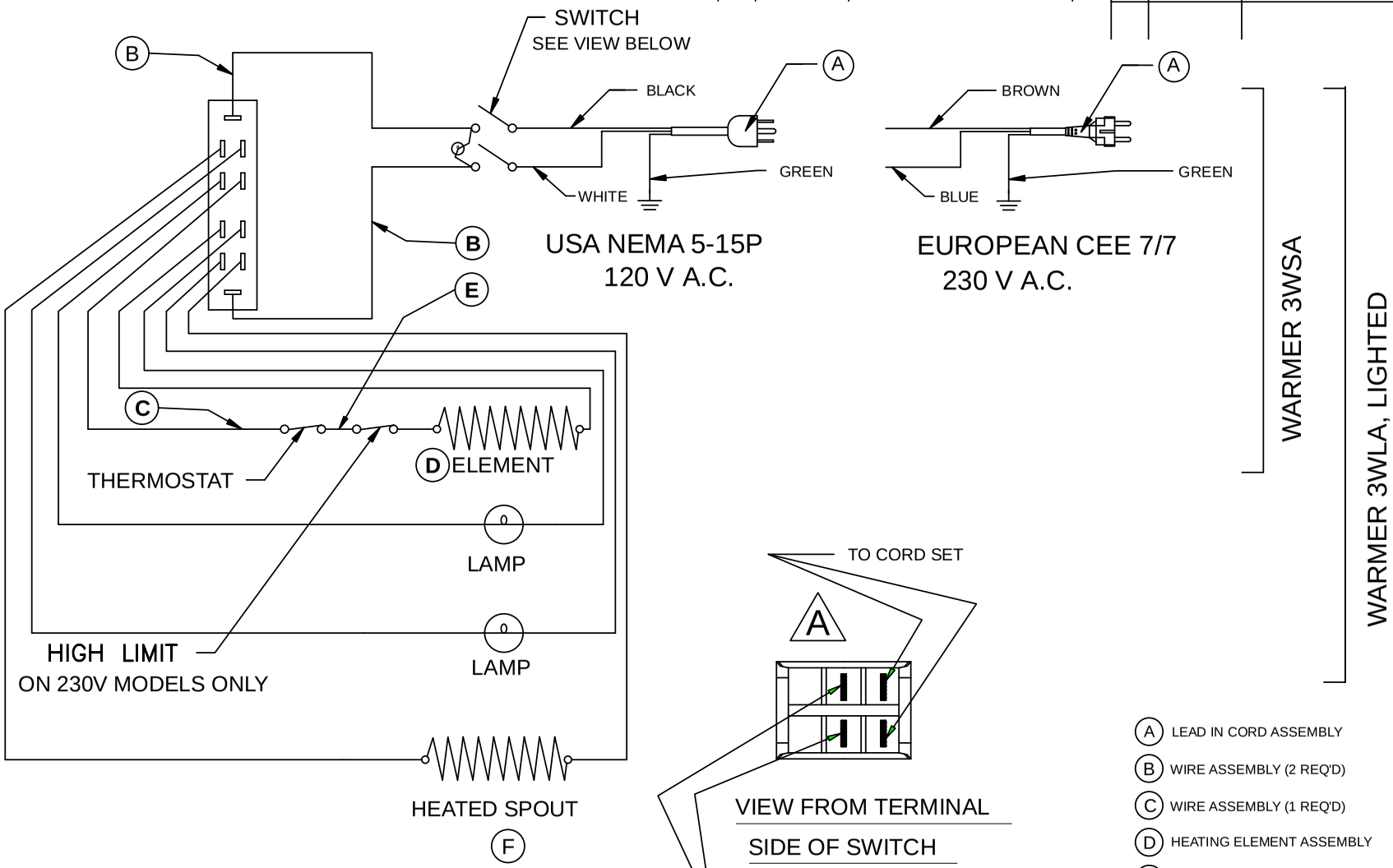

- (A) LEAD IN CORD ASSEMBLY
- (B) WIRE ASSEMBLY (2 REQ'D)
- (C) WIRE ASSEMBLY (1 REQ'D)
- (D) HEATING ELEMENT ASSEMBLY
- (E) WIRE ASSEMBLY (1 REQ'D)
- (F) HEATED SPOUT (1 REQ'D)

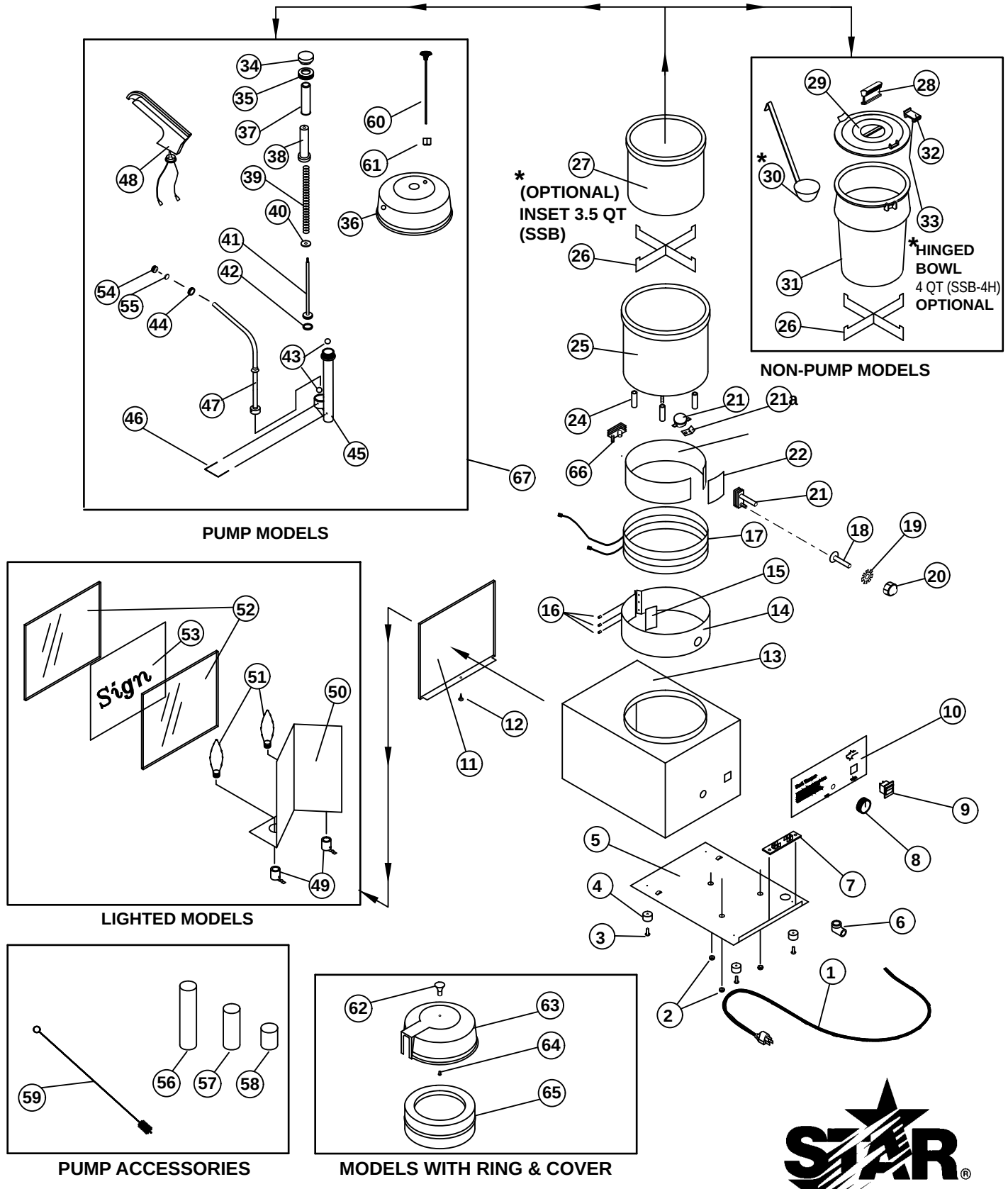

* = FOR INSETS & LADLES CONTACT DEALER

MODEL 3WLA-3WSA
3 1/2QT., 4 QT. 120V/240V

STAR MANUFACTURING INTERNATIONAL, INC.

SK1165 REV. I 08-22-05

PARTS LIST

June 30, 2008, Rev. L

MODEL 3WLA-3WSA 120V/240V

Key Number	Part Number	Number Per Unit	Description	
1	N2-30409	1	CORD ASSY.	120V
		1	CORD ASSY.	240V
2	2C-2559	3	10-24 NUT	
3	2C-Y5059	4	POP RIVET	
4	2I-H7685	4	FOOT	
5	N2-Y8542	1	BOTTOM	
6	2K-7889	1	BUSHING 90°	
7	2E-Y8233	1	TERMINAL BOARD	
8	2R-Y8261	1	KNOB-THERMOSTAT	
9	2E-Z5884	1	SWITCH	
10	2M-Y8248	1	REAR PANEL (SIGN)	
11	N2-Y8545	1	FRONT PANEL S.S.	
12	2C-1631	1	SCREW #6 x 1/4	
13	N2-30424	1	BODY ASSY. (HEATED SPOUT)	
	N2-30425	1	BODY ASSY. (WARMER)	
14	N2-Y8130	1	BAND	
15	N2-Y8310	1	PLATE	
16	2C-H5569	3	POP RIVET 1/8 x .6	
17	2N-Y8227	1	ELEMENT 120V	
	2N-Y8226	1	ELEMENT 240V	
18	2C-Y8312	1	SCREW 8-32 x 1 FH	
19	2C-H8670	2	WASHER-LOCK #8	
20	2C-2556	2	NUT #8-32	
21	2T-Y8262	1	THERMOSTAT	
	2T-Z0251	1	THERMOSTAT, PRESET (3WSA-HSS ONLY)	
21a	C3-Y8042	1	THERMOSTAT CLIP (3WSA-HSS ONLY)	
22	N2-Y8129	1	BRACKET	
23	N2-Y8127	1	BAND-HEATER	
24	2A-Y8556	3	SPACER	
25	N2-30423	1	BOWL ASSY.	
26	N2-30455	1	BOWL SPACER	
27	2D-H6295	1	STAINLESS INSET (OPTIONAL)	
28	2R-Y5701	1	HANDLE	
29	N2-30436	1	COVER	
30	2L-Z0577	1	LADLE 1 OZ.	
31	N2-30437	1	INSET	
32	O2-Y5703	1	HINGE-LEAF	
33	2B-Y5792	2	PIN-HINGE	
34	2R-Y9854	1	KNOB-BLK.	
35	2A-Y9637	1	NUT	
36	2L-Y7618	1	COVER	
	N2-Z0253	1	COVER PUMP (3WSA-HSS ONLY)	
37	2V-Y7661	1	PLUNGER-SHIELD	
38	2A-Z0718	1	GUIDE	
39	2P-Z0830	1	SPRING	
40	N2-Y4146	1	WASHER	
41	2I-Y9636	1	ROD/PLUNGER	
42	2I-Y4143	1	O-RING	
43	2P-Y6196	2	BALL-VALVE	
44	2A-Y7658	1	NUT	
45	2I-Z0730	1	PUMP CHAMBER	
46	N2-Y9685	1	PIN-"U"	

IMPORTANT: WHEN ORDERING, SPECIFY VOLTAGE OR TYPE GAS DESIRED
INCLUDE MODEL AND SERIAL NUMBER

Some items are included for illustrative purposes only and in certain instances may not be available.

Star Manufacturing International, Inc.

PARTS LIST

June 30, 2008, Rev. L

MODEL 3WLA-3WSA 120V/240V

Key Number	Part Number	Number Per Unit	Description	
47	2V-62008	1	DISPENSE TUBE ASSEMBLY STANDARD	
	2V-62007	1	DISPENSE TUBE ASSEMBLY BUTTER	
48	N2-30449	1	SPOUT ASSY.	120V
	N2-30427	1	SPOUT ASSY.	240V
NI	2N-Y8557	1	HEATER 15 WT 120V	N2-30449, 120V SPOUT ASSY.
49	2E-Y8515	2	LAMP SOCKET	120V
	N1-119045	2	LAMP SOCKET	240V
50	N2-30428	1	LAMP SHIELD	120V
	N2-30431	1	LAMP SHIELD	240V
51	2S-Y8552	2	LAMP 15W	120V
	2S-Y8321	2	LAMP 15W	220V
52	2Q-Y8617	2	PANEL	
53	2M-Z0707	6	Packet, Signs Kit (Kit contains BBQ, Chili, Chili Dog, Fudge and Soup Signs)	
	2M-Y8497	1	SIGN “BUTTERED”	
	2M-Z0247	1	SIGN “FREE CHEESE” (3WSA-HSS ONLY)	
	2M-Z0248	1	SIGN “FREE CHILI” (3WSA-HSS ONLY)	
54	2P-Y6108	1	PLUG - CAP	
55	2I-Y6110	1	GASKET - CAP	
56	N2-Y8763	1	TUBE SPACER 1/4 OZ.	
57	N2-Y6123	1	TUBE SPACER 1/2 OZ.	
58	N2-Y8764	1	TUBE SPACER 3/4 OZ.	
59	2P-Y6211	1	BRUSH	
60	2T-Z0250	1	THERMOMETER (3WSA-HSS ONLY)	
61	2A-Z0252	1	NUT THERMOMETER (3WSA-HSS ONLY)	
62	2R-Z0872	1	KNOB	
63	2L-Z0541	1	COVER	
64	2C-T1004	1	SCREW	
65	2L-Z0540	1	RING	
66	2T-Z0622	1	H.L. THERMOSTAT (ON 240V MODELS ONLY)	
67	N2-30404	1	PUMP ASSEMBLY COMPLETE	

IMPORTANT: WHEN ORDERING, SPECIFY VOLTAGE OR TYPE GAS DESIRED
INCLUDE MODEL AND SERIAL NUMBER

Some items are included for illustrative purposes only and in certain instances may not be available.

STAR MANUFACTURING
10 Sunnen Drive, St. Louis, MO 63143 U.S.A.
(800) 807-9054 (314) 781-2777
Parts & Service (800) 807-9054
www.star-mfg.com