VULCAN

CATALOG OF REPLACEMENT PARTS

K SERIES GAS KETTLES

Stationary Kettles

ML-136090	*K20GL*
ML-136091	*K40GL*
ML-136092	*K60GL*

Tilting Kettles

ML-136094	*K20GLT*
ML-136095	*K40GLT*
ML-136096	*K60GLT*

For additional information on Vulcan-Hart Company or to locate an authorized parts and service provider in your area, visit our website at www.vulcanequipment.com

VULCAN-HART
DIVISION OF ITW FOOD EQUIPMENT GROUP, LLC
WWW.VULCANEQUIPMENT.COM

3600 NORTH POINT BLVD.
BALTIMORE, MD 21222

F-35462 (May 2012)

 © VULCAN-HART COMPANY 2012

Table of Contents

5 DRAW-OFF VALVE ASSEMBLY (2 INCH)
7 DRAW-OFF VALVE ASSEMBLY (3 INCH)
9 PLUG VALVE (2 INCH)
11 CONTROL PANEL (STATIONARY)
13 ELECTRICAL COMPONENTS (STATIONARY)
15 ELECTRICAL COMPONENTS (TILTING)
17 CONTROL PANEL AND ELECTRICAL COMPONENTS (TILTING)
19 GAS HEAT COMPONENTS
21 TILTING COMPONENTS
23 LID AND HANDLE ASSEMBLY
25 KETTLE EXTERIOR
27 PANELS (STATIONARY)
29 PANELS AND FRAME (TILTING)

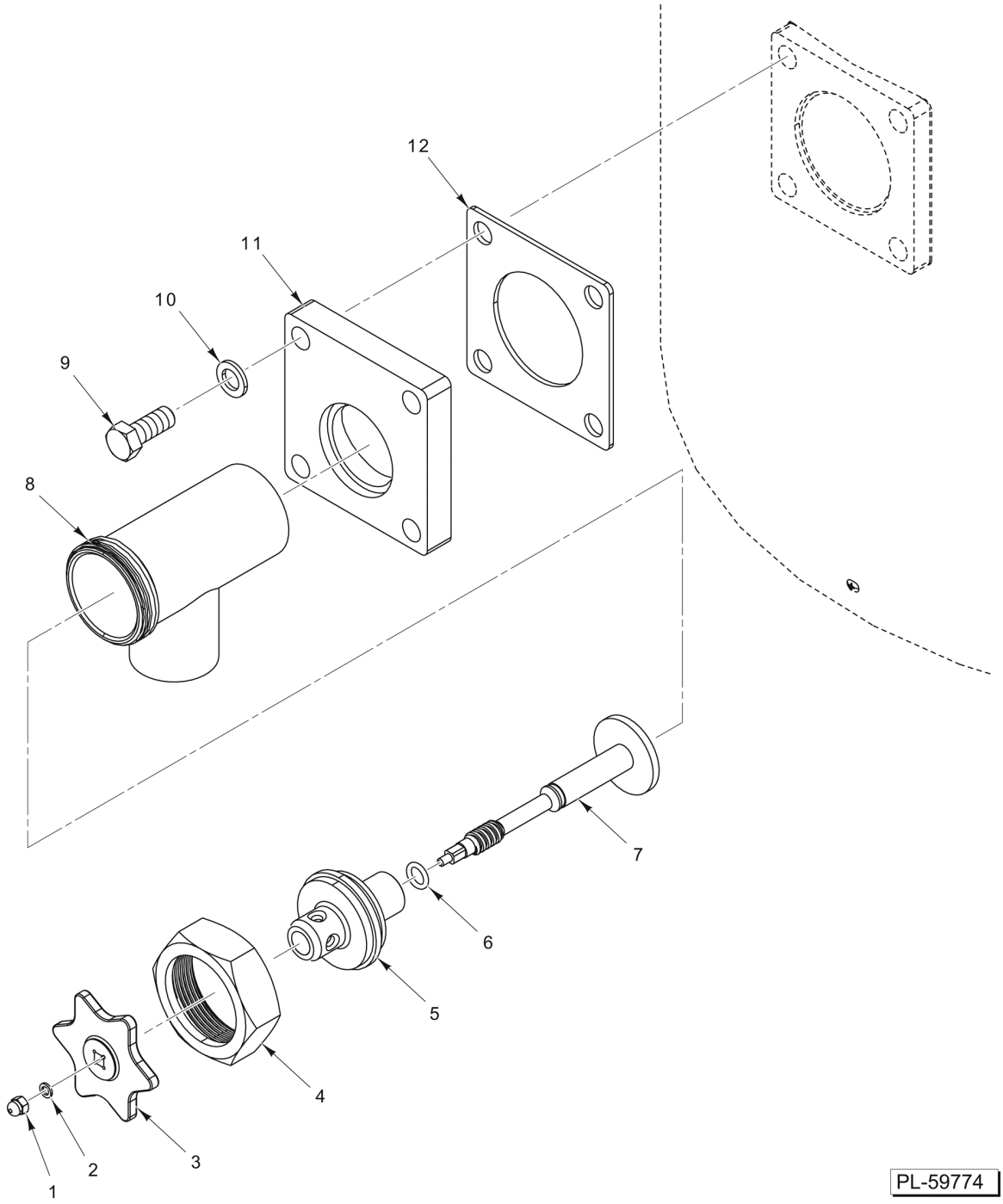

DRAW-OFF VALVE ASSEMBLY
(2 INCH)

DRAW-OFF VALVE ASSEMBLY (2 INCH)

ILLUS. PL-59774	PART NO.	NAME OF PART	AMT.
1	00-856213-00008	Nut	1
2	00-856213-00009	Washer	1
3	00-856213-00005	Handle	1
4	00-856213-00004	Nut - Hex	1
5	00-856213-00006	Retainer	1
6	00-856213-00007	O-Ring	1
7	00-856213-00003	Disc & Stem Assy	1
8	00-856213-00002	Valve Body (2 In.)	1
9	SC-041-44	Cap Screw 1/2-13 x 1-1/4 Hex Hd	4
10	WL-006-35	Lockwasher 1/2 Light	4
11	00-856570-00002	Plate - Valve Mounting (2 In.)	1
12	00-855830-00001	Gasket - Draw-Off Valve	1
	00-856569-00001	Draw-Off Valve Assy. (2 In.) (Incls. Items 1 thru 8 & 11)	1

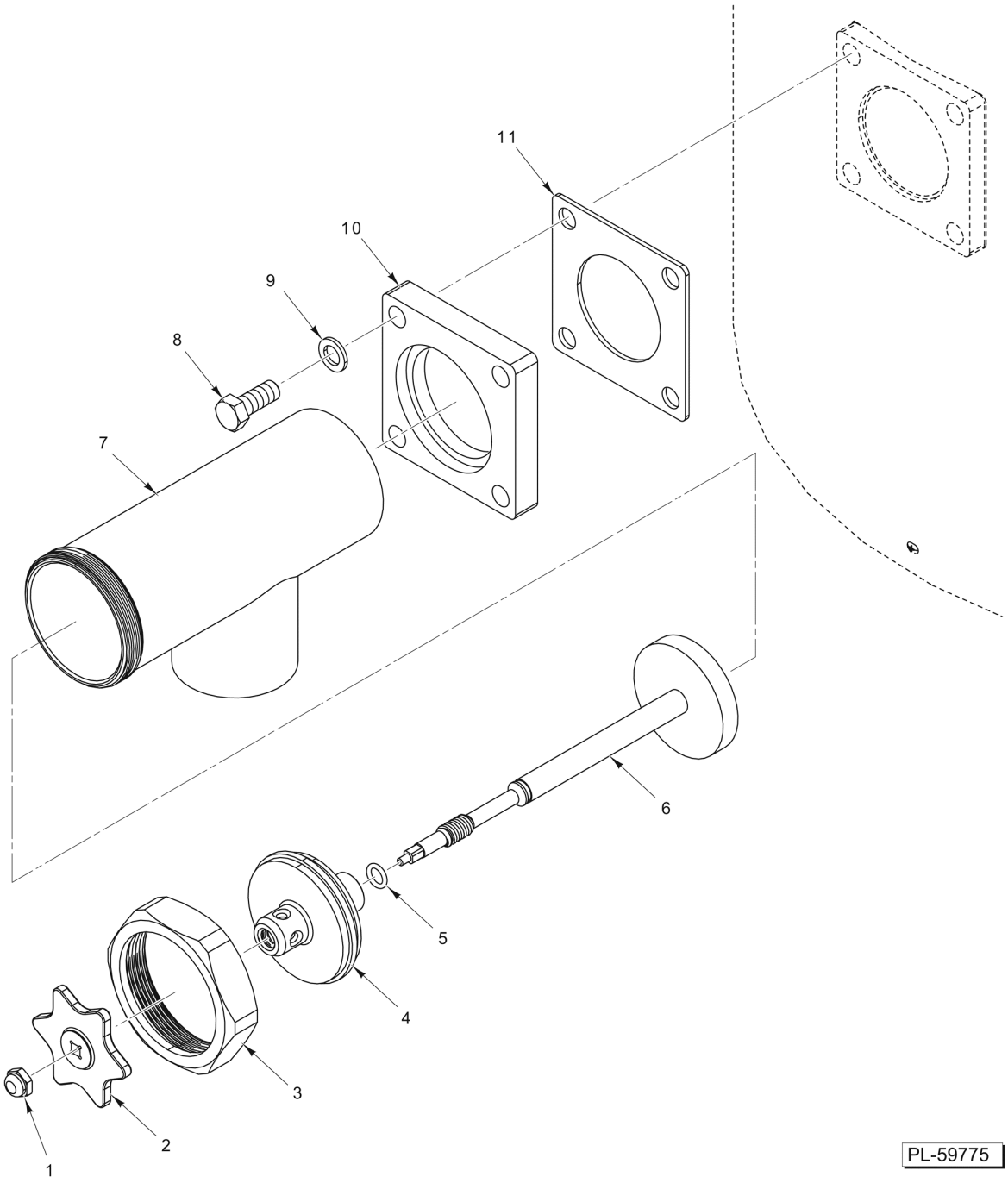

DRAW-OFF VALVE ASSEMBLY
(3 INCH)

DRAW-OFF VALVE ASSEMBLY
(3 INCH)

ILLUS. PL-59775	PART NO.	NAME OF PART	AMT.
1	00-359996-00007	Nut	1
2	00-359996-00005	Handle	1
3	00-369996-00004	Nut - Hex	1
4	00-369996-00003	Retainer	1
5	00-369996-00006	O-Ring	1
6	00-369996-00002	Disc & Stem Assy	1
7	00-369996-00001	Valve Body (3 In.)	1
8	SC-041-44	Cap Screw 1/2-13 x 1-1/4 Hex Hd	4
9	WL-006-35	Lockwasher 1/2 Light	4
10	00-856570-00001	Plate - Valve Mounting (3 In.)	1
11	00-855830-00001	Gasket - Draw-Off Valve	1
	00-856569-00003	Draw-Off Valve Assy. (3 In.) (Incls. Items 1 thru 7 & 10)	1

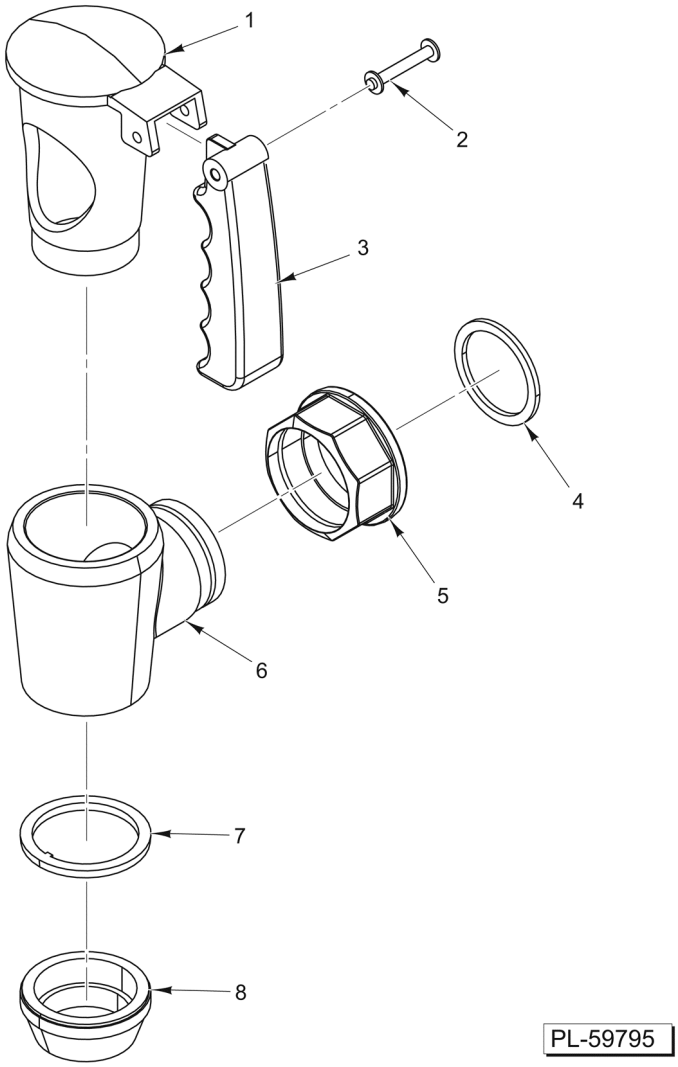

PLUG VALVE
(2 INCH)

PLUG VALVE
(2 INCH)

ILLUS. PL-59795	PART NO.	NAME OF PART	AMT.
1	00-857547-00004	Plug - Valve (Draw-Off)	1
2	00-857547-00007	Pin - Retaining	1
3	00-857547-00006	Handle - Athermic	1
4	00-857547-00009	Gasket - Coupling	1
5	00-857547-00003	Coupling - Valve (Draw-Off)	1
6	00-857547-00002	Valve Body (Draw-Off)	1
7	00-857547-00005	Washer	1
8	00-857547-00008	Ring - Metal	1
	00-857547-00001	Draw-Off Valve Assy. (2 In., Plug Type) (Incls. Items 1 thru 8)	1

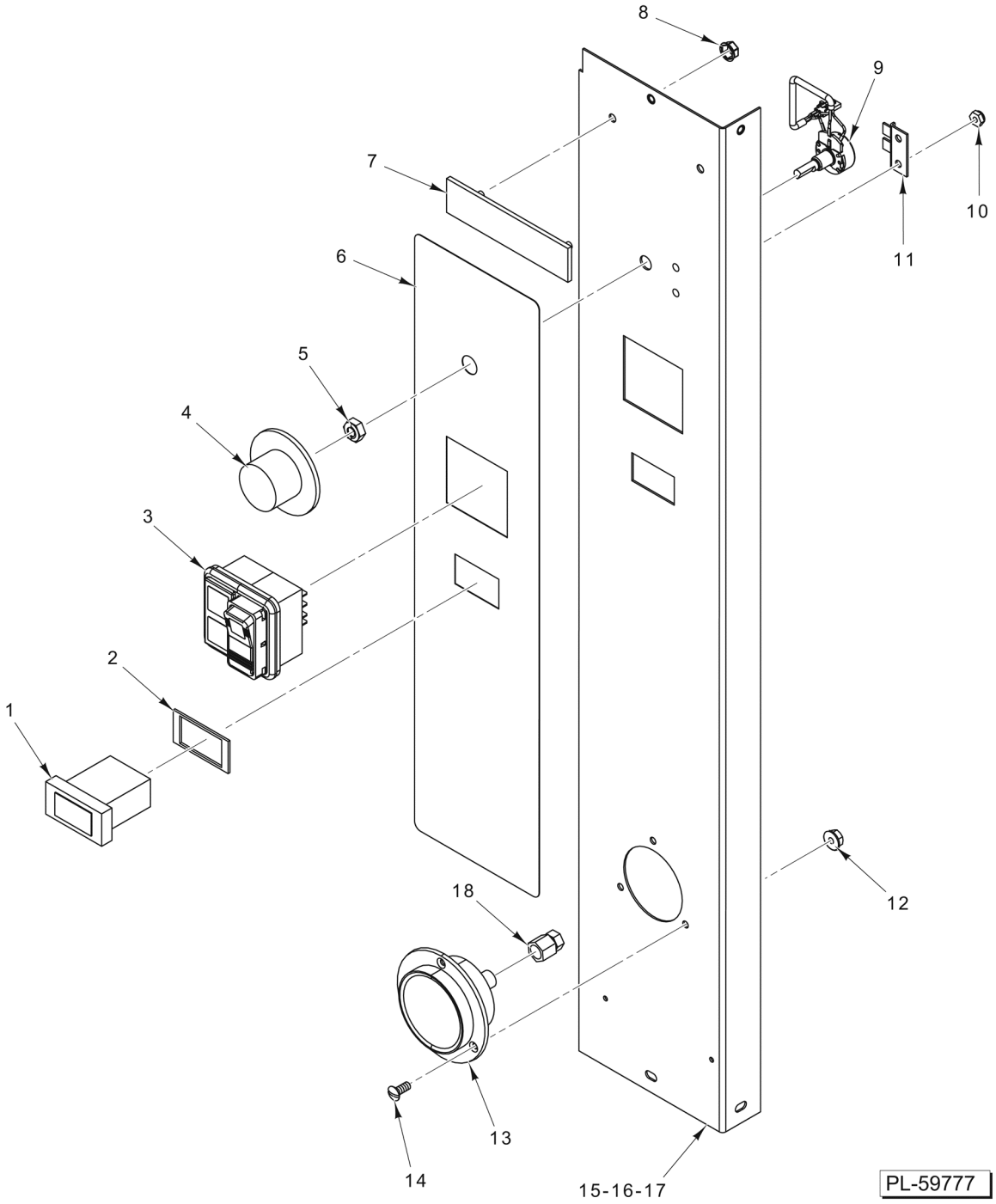

CONTROL PANEL (STATIONARY)

CONTROL PANEL (STATIONARY)

ILLUS. PL-59777	PART NO.	NAME OF PART	AMT.
1	00-855969-00001	Light - Indicator (Red) (24 VAC)	1
2	00-856678-00001	Gasket	1
3	00-855797-00005	Switch Assy. (Power with Indicator Lights)	1
4	00-854647-00001	Knob - Control	1
5	00-854693-00001	Shaft - Rotary Seal	1
6	00-855831-00001	Overlay - Gas Kettle	1
7	00-957916-00003	Nameplate - Small (Vulcan)	1
8	NS-047-28	Nut - Pal	2
9	00-857389-00001	Potentiometer	1
10	NS-047-98	Lock Nut 8-32 Hex	2
11	00-856119-00001	Bracket - Offset	1
12	NS-011-07	Nut 6-32 Hex (SST)	3
13	00-856083-00001	Gauge - Pressure (Panel Mount)	1
14	SC-129-39	Mach. Screw 6-32 x 5/16 Slotted Oval Hd. (SST)	3
15	00-855884-00001	Panel - Control (K20GL)	1
16	00-856040-00001	Panel - Control (K40GL)	1
17	00-856122-00001	Panel - Control (K60GL)	1
18	FP-086-36	Fitting - Tube (1/4)	1

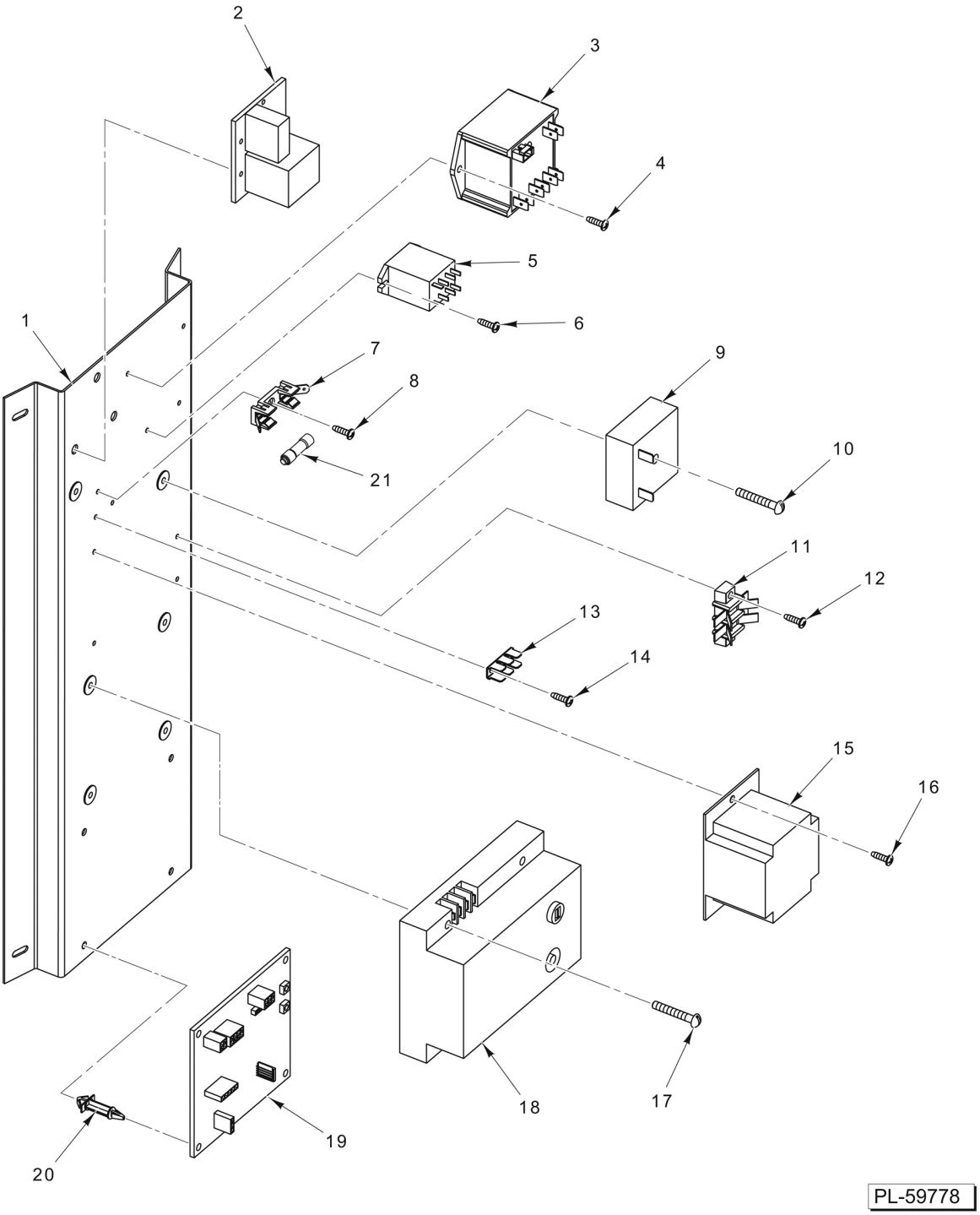

ELECTRICAL COMPONENTS (STATIONARY)

ELECTRICAL COMPONENTS (STATIONARY)

ILLUS. PL-59778	PART NO.	NAME OF PART	AMT.
1	00-855863-00001	Bracket - Ignition Module	1
2	00-844070-00001	Control - Low Water	1
3	00-857112-00001	Controller - Temperature	1
4	SD-019-29	Self-Tapping Screw 6-20 x 1/2 Phil. Pan Hd., Type B	2
5	00-416535-00004	Switch - Relay SPDT 24 V. Coil (Electronic Ignition)	1
6	SD-019-29	Self-Tapping Screw 6-20 x 1/2 Phil. Pan Hd., Type B	2
7	00-856677-00001	Block - Fuse (20 Amp., 300 V.)	1
8	SD-019-29	Self-Tapping Screw 6-20 x 1/2 Phil. Pan Hd., Type B	1
9	00-855973-00001	Relay - Time Delay	1
10	SC-125-46	Mach. Screw 8-32 x 1-1/4 Phil. Truss Hd. (SST)	1
11	00-854707-00002	Block - Terminal (2-Pole)	1
12	SD-019-29	Self-Tapping Screw 6-20 x 1/2 Phil. Pan Hd., Type B	2
13	00-419317	Terminal - Stationary	1
14	SD-019-29	Self-Tapping Screw 6-20 x 1/2 Phil. Pan Hd., Type B	2
15	00-411500-00012	Transformer (40 Amp, 120 V.)	1
16	SD-019-29	Self-Tapping Screw 6-20 x 1/2 Phil. Pan Hd., Type B	2
17	SC-125-46	Mach. Screw 8-32 x 1-1/4 Phil. Truss Hd. (SST)	4
18	00-855976-00001	Module - Ignition	1
19	00-855867-00001	Board - Control Universal (EBM)	1
20	00-857060-00001	Standoff - Board	4
21	FE-024-94	Fuse - Time Delay (4.0 Amp.)	1

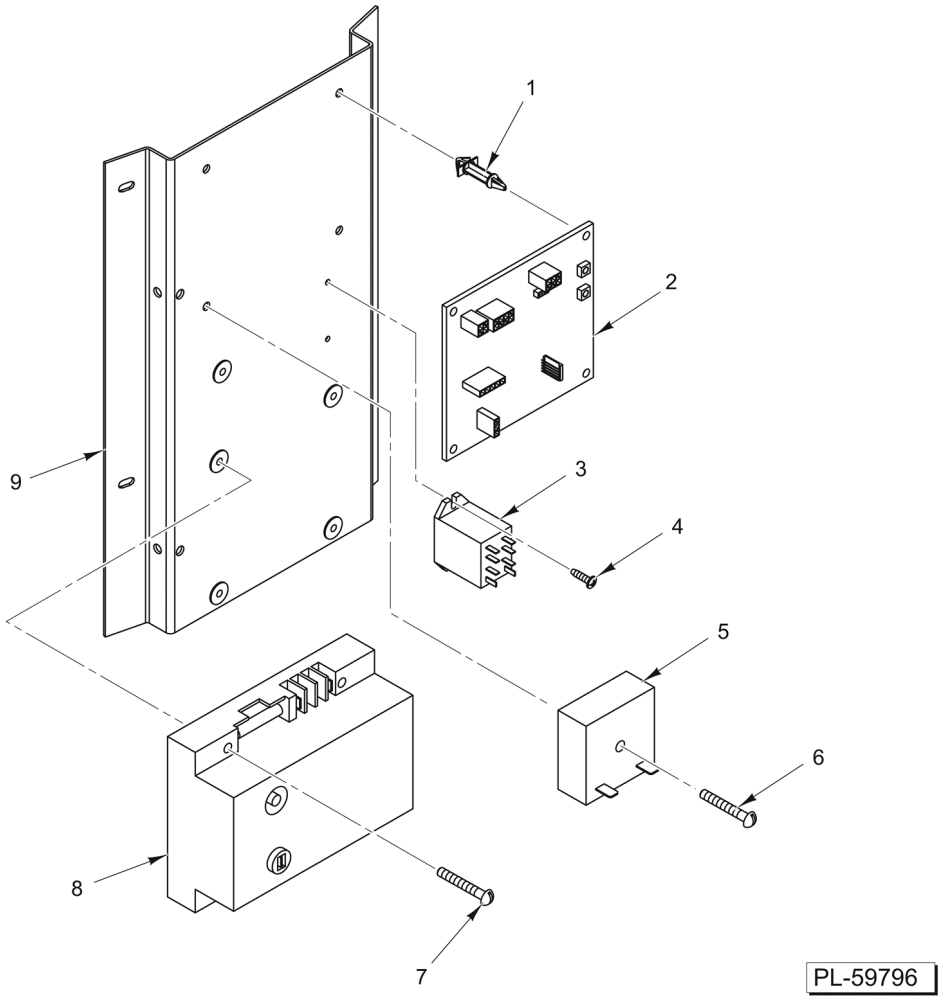

ELECTRICAL COMPONENTS (TILTING)

ELECTRICAL COMPONENTS (TILTING)

ILLUS. PL-59796	PART NO.	NAME OF PART	AMT.
1	00-857060-00001	Standoff - Board	4
2	00-855867-00001	Board - Control Universal (EBM)	1
3	00-416535-00004	Switch - Relay SPDT 24 V. Coil (Electronic Ignition)	1
4	SD-019-29	Self-Tapping Screw 6-20 x 1/2 Phil. Pan Hd., Type B	2
5	00-855973-00001	Relay - Time Delay	1
6	SC-125-46	Mach. Screw 8-32 x 1-1/4 Phil. Truss Hd. (SST)	1
7	SC-125-46	Mach. Screw 8-32 x 1-1/4 Phil. Truss Hd. (SST)	4
8	00-855976-00001	Module - Ignition	1
9	00-856954-00001	Bracket - Ignition Module	1

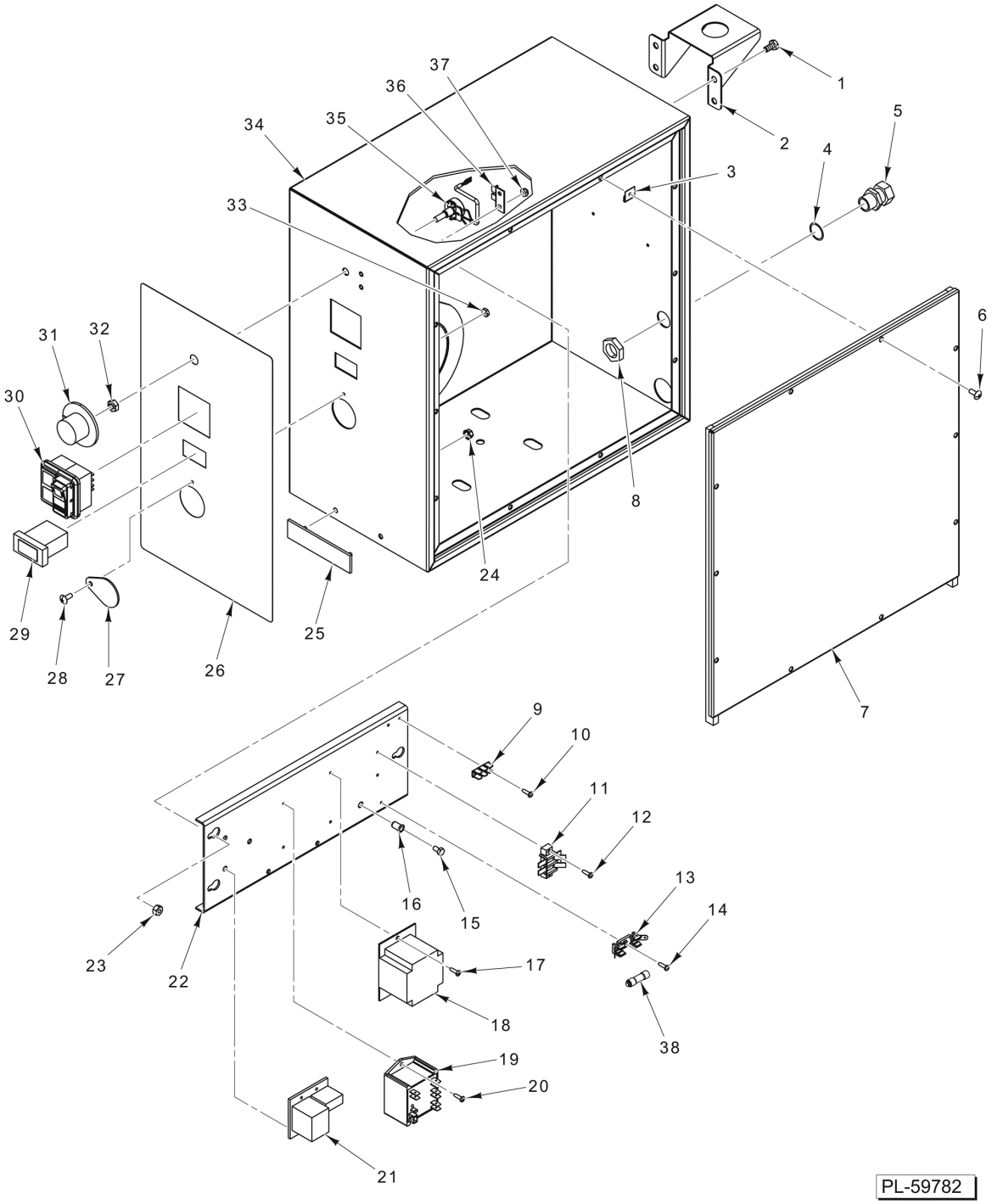

CONTROL PANEL AND ELECTRICAL COMPONENTS (TILTING)

CONTROL PANEL AND ELECTRICAL COMPONENTS (TILTING)

ILLUS. PL-59782	PART NO.	NAME OF PART	AMT.
1	SC-041-50	Cap Screw 1/4-20 x 1/2 Hex Hd. (SST)	4
2	00-855902-00001	Bracket - Faucet	1
3	00-854766-00001	Nut - Speed 3 Type	10
4	00-854763-00002	O-Ring	1
5	00-854761-00002	Relief - Strain 1/2 Electrical	1
6	SC-066-06	Mach. Screw 10-24 x 1/2 Phil. Truss Hd. (SST)	10
7	00-856210-00001	Lid Assy. - Control Box	1
8	00-854762-00002	Lock Nut 1/2 Electrical	1
9	00-419317	Terminal - Stationary	1
10	SD-019-29	Self-Tapping Screw 6-20 x 1/2 Phil. Pan Hd., Type B	2
11	00-854707-00002	Block - Terminal (2-Pole)	1
12	SD-019-29	Self-Tapping Screw 6-20 x 1/2 Phil. Pan Hd., Type B	2
13	00-856677-00001	Block - Fuse (20 Amp., 300 V.)	1
14	SD-019-29	Self-Tapping Screw 6-20 x 1/2 Phil. Pan Hd., Type B	1
15	SC-120-23	Mach. Screw 10-24 x 3/8 Hex Hd	1
16	00-328479-00002	Nut - Insert	1
17	SD-019-29	Self-Tapping Screw 6-20 x 1/2 Phil. Pan Hd., Type B	2
18	00-411500-00012	Transformer (40 Amp, 120 V.)	1
19	00-857112-00001	Controller - Temperature	1
20	SD-019-29	Self-Tapping Screw 6-20 x 1/2 Phil. Pan Hd., Type B	2
21	00-844070-00001	Control - Low Water	1
22	00-856847-00001	Panel - Electrical	1
23	NS-015-01	Nut 1/4-20 Hex (SST)	3
24	NS-047-28	Nut - Pal	2
25	00-957916-00003	Nameplate - Small (Vulcan)	1
26	00-855889-00001	Overlay - Tilting Gas Kettles	1
27	00-856218-00001	Flap - Tilt Handle Opening	1
28	SC-066-06	Mach. Screw 10-24 x 1/2 Phil. Truss Hd. (SST)	1
29	00-855969-00001	Light - Indicator (Red) (24 VAC)	1
30	00-855797-00005	Switch Assy. (Power with Indicator Lights)	1
31	00-854647-00001	Knob - Control	1
32	00-854693-00001	Shaft - Rotary Seal	1
33	NS-011-18	Nut 10-24 Hex (SST)	1
34	00-856816-00001	Box - Control	1
35	00-857389-00001	Potentiometer	1
36	00-856119-00001	Bracket - Offset	1
37	NS-047-98	Lock Nut 8-32 Hex	2
38	FE-024-94	Fuse - Time Delay (4.0 Amp.)	1

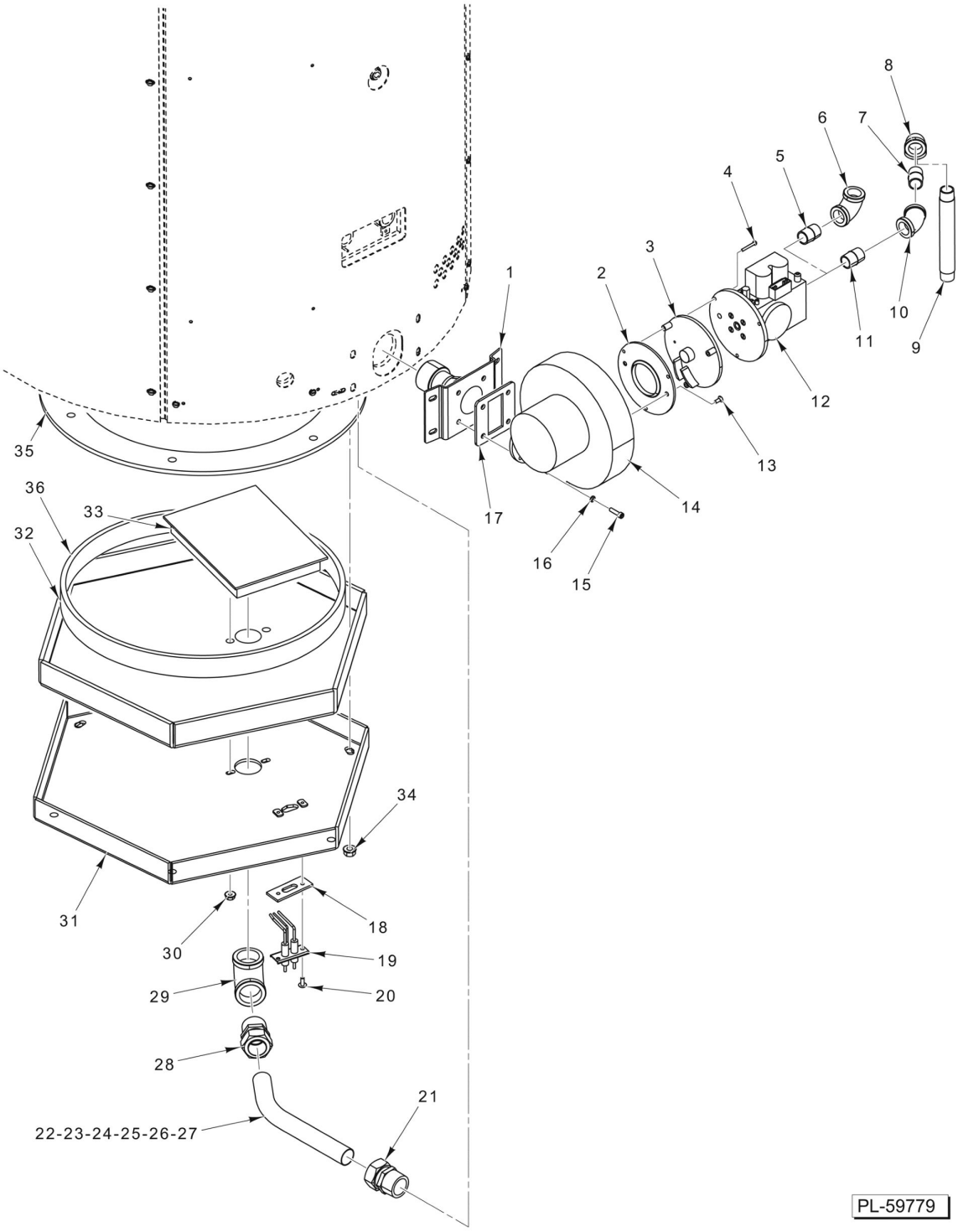

GAS HEAT COMPONENTS

GAS HEAT COMPONENTS

ILLUS. PL-59779	PART NO.	NAME OF PART	AMT.
1	00-856941-00001	Manifold - Burner	1
2	00-855869-00001	Plate	1
3	00-855873-00001	Plate	1
4	00-855878-00001	Screw	3
5	FP-035-91	Pipe 1/2 x 1-1/8 TBE (Tilting Kettles)	1
6	FP-013-15	Elbow - Pipe 1/2 x 90 Deg. (Tilting Kettles)	1
7	FP-035-91	Pipe 1/2 x 1-1/8 TBE (Stationary Kettles)	1
8	FP-013-15	Elbow - Pipe 1/2 x 90 Deg. (Stationary Kettles)	1
9	FP-059-63	Pipe 1/2 x 6 TBE (Stationary Kettles)	1
10	FP-013-14	Elbow - Pipe 1/2 x 45 Deg. (Stationary Kettles)	1
11	FP-035-91	Pipe 1/2 x 1-1/8 TBE (Stationary Kettles)	1
12	00-855870-00001	Valve Assy. - Gas	1
13	00-855877-00001	Screw	2
14	00-855868-00001	Blower Assy	1
15	SC-123-01	Cap Screw 10-24 x 3/4 Hex Socket Hd. (SST)	4
16	WL-006-07	Lockwasher #10 Helical (SST)	4
17	00-855649-00001	Gasket - Blower	1
18	00-855935-00001	Gasket - Spark Ignitor	1
19	00-855843-00001	Ignitor - Spark	1
20	SC-066-06	Mach. Screw 10-24 x 1/2 Phil. Truss Hd. (SST)	2
21	FP-091-19	Fitting - Tube (1 In.) (Brass)	1
22	00-856055-00001	Tube - Gas Supply (ML-136090)	1
23	00-856054-00001	Tube - Gas Supply (ML-136091)	1
24	00-856065-00001	Tube - Gas Supply (ML-136092)	1
25	00-856375-00001	Tube - Gas Supply (ML-136094)	1
26	00-856253-00001	Tube - Gas Supply (ML-136095)	1
27	00-856289-00001	Tube - Gas Supply (ML-136096)	1
28	FP-091-19	Fitting - Tube (1 In.) (Brass)	1
29	FP-013-27	Elbow - Pipe 1 x 90 Deg.	1
30	NS-038-04	Lock Nut 1/4-20	2
31	00-855980-00001	Cover - Combustion Chamber	1
32	00-855950-00001	Insulation	1
33	00-855826-00001	Burner - Flat	1
34	NS-038-10	Lock Nut 3/8-16 Hex	6
35	00-856102-00001	Seal Ring	1
36	00-855914-00001	Ring - Floating Seal	1

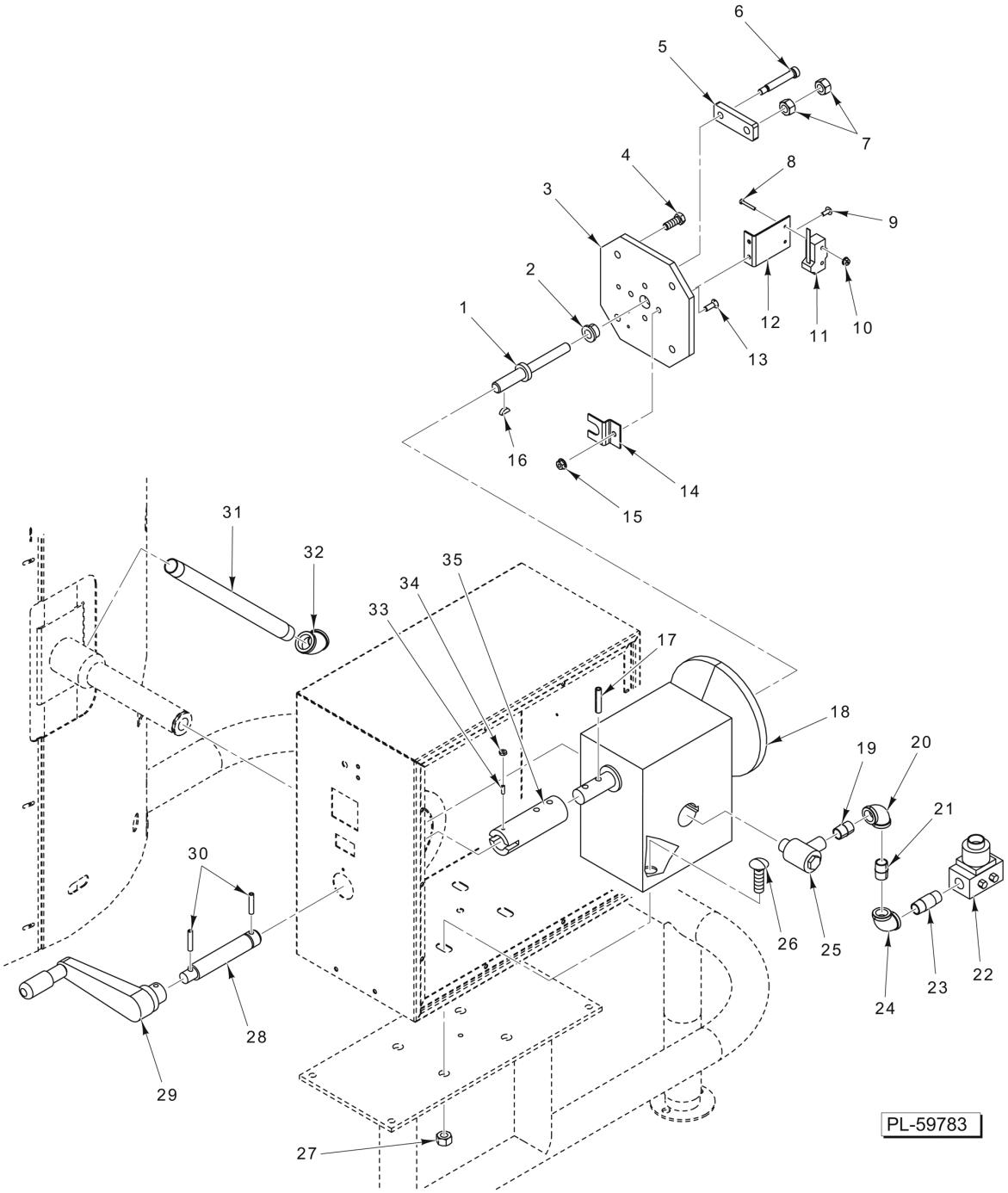

TILTING COMPONENTS

TILTING COMPONENTS

ILLUS. PL-59783	PART NO.	NAME OF PART	AMT.
1	00-856856-00001	Shaft - Positive Stop	1
2	00-857295-00001	Bearing 1/2 (Bronze)	1
3	00-856854-00001	Plate - Positive Stop	1
4	SC-041-30	Cap Screw 3/8-16 x 1 Hex Hd. (SST)	4
5	00-856855-00001	Traveller - Positve Stop	1
6	SC-130-09	Shoulder Screw 3/8 Dia. 5/16-18 x 2 Hex Socket Hd	1
7	NS-049-30	Jam Nut 1/2-20 Hex	2
8	SC-119-51	Mach. Screw 6-32 x 1 Slotted Pan Hd. (SST)	2
9	SC-066-06	Mach. Screw 10-24 x 1/2 Phil. Truss Hd. (SST)	2
10	NS-038-01	Lock Nut 6-32 Flange	2
11	00-411496-000F1	Switch - Micro	1
12	00-856843-00001	Bracket - Limit Switch	1
13	SC-022-33	Mach. Screw 1/4-20 x 3/4 Slotted Flat Hd. (SST)	1
14	00-856858-00001	Clamp - Positve Stop	1
15	NS-038-04	Lock Nut 1/4-20	1
16	KW-003-07	Key - Woodruff 3/16 x 5/8	1
17	RP-003-36	Pin - Roll	2
18	00-856184-00002	Gear - Reducer (80:1)	1
19	FP-035-91	Pipe 1/2 x 1-1/8 TBE	1
20	FP-013-15	Elbow - Pipe 1/2 x 90 Deg	1
21	FP-035-91	Pipe 1/2 x 1-1/8 TBE	1
22	00-856004-00001	Valve - Shut-Off	1
23	FP-035-95	Pipe 1/2 x 2 TBE	1
24	FP-013-15	Elbow - Pipe 1/2 x 90 Deg	1
25	00-856838-00001	Fitting 1/2 Swivel	1
26	SC-082-45	Bolt 1/2-13 x 1-1/2 Sq. Neck Rd. Hd. (SST)	4
27	NS-015-20	Nut 1/2-13 Hex (SST)	4
28	00-854652-00002	Shaft - Crank Handle	1
29	00-854651-00001	Handle - Crank	1
30	RP-002-46	Pin - Roll	2
31	FP-042-41	Pipe 3/4 x 14-7/8 TBE (Brass)	1
32	FP-013-20	Elbow 3/4 x 45 Deg	1
33	00-854649-00001	Detent - Ball	1
34	NS-011-18	Nut 10-24 Hex (SST)	1
35	00-854644-00002	Extension - Shaft Reducer	1
	00-854650-00002	Handle Assy. (Incls. Items 28, 29, & 30)	1
	00-856857-00001	Positive Stop Assy. (Incls. Items 1 thru 16)	1

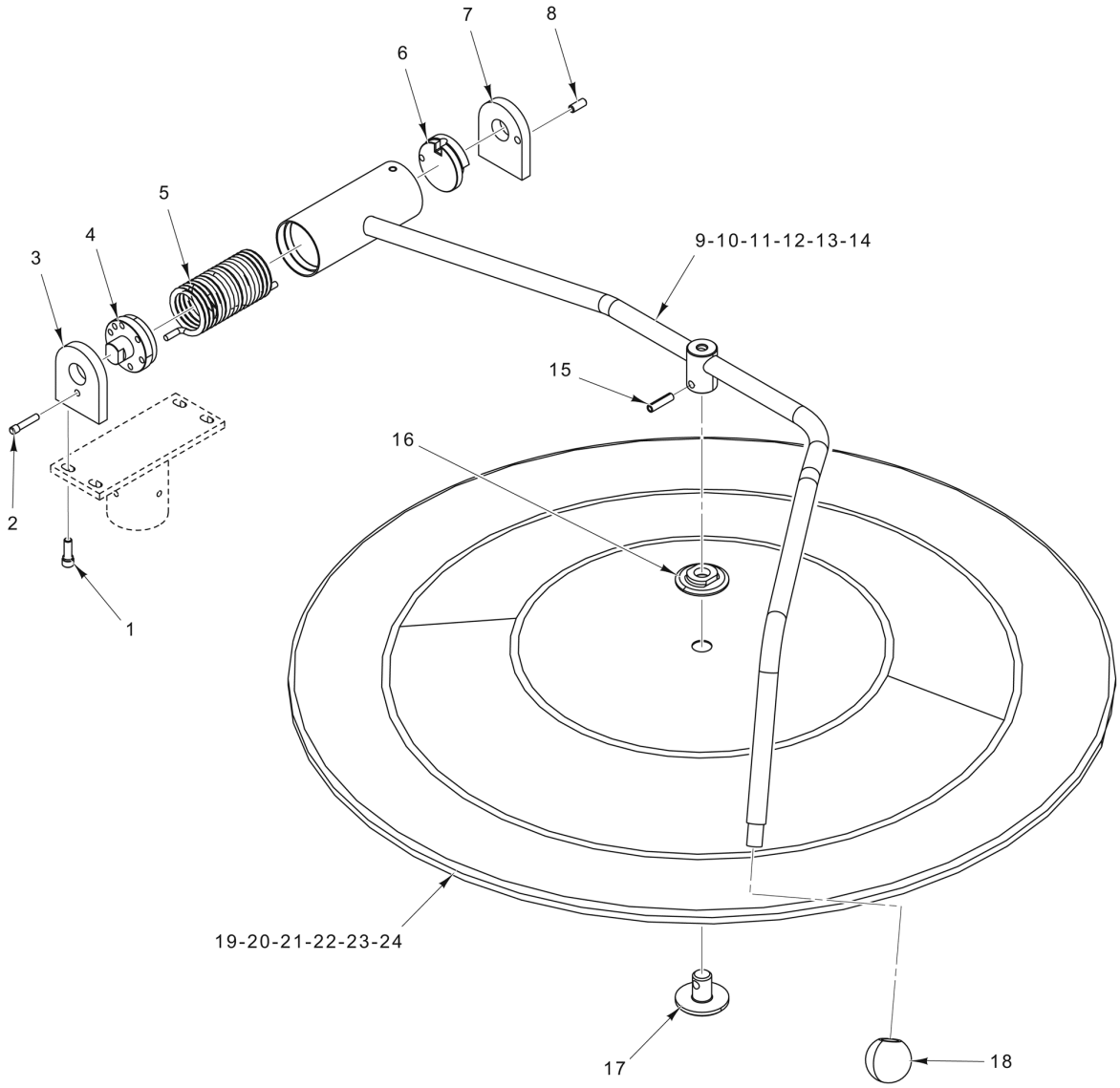

LID AND HANDLE ASSEMBLY

LID AND HANDLE ASSEMBLY

ILLUS. PL-59776	PART NO.	NAME OF PART	AMT.
1	SC-110-98	Cap Screw 1/4-20 x 3/4 Hex Socket Hd. (SST)	4
2	00-853284-00001	Pin - Lock	1
3	00-853286-00001	Plate - Front	1
4	00-853292-00001	Disc - Tension Adjustment	1
5	00-853289-00001	Spring - Torsion	1
6	00-853293-00001	Disc - Rotary Stop	1
7	00-855220-00002	Plate - Rear (Incls. Item 8)	1
8	00-855221-00001	Pin - Stop	1
9	00-856507-00001	Handle Assy. (ML-136090)	1
10	00-856511-00001	Handle Assy. (ML-136091)	1
11	00-856514-00001	Handle Assy. (ML-136092)	1
12	00-855880-00001	Handle Assy. (ML-136094)	1
13	00-855886-00001	Handle Assy. (ML-136095)	1
14	00-856287-00001	Handle Assy. (ML-136096)	1
15	RP-004-31	Roll Pin 1/4 x 1	1
16	00-853568-00001	Nut - Kettle Cover	1
17	00-853567-00001	Rocker - Kettle Cover	1
18	00-853285-00001	Knob - Press On	1
19	00-856490-00002	Lid Assy. (ML-136090) (Incls. Items 16 & 17)	1
20	00-856495-00002	Lid Assy. (ML-136091) (Incls. Items 16 & 17)	1
21	00-856500-00002	Lid Assy. (ML-136092) (Incls. Items 16 & 17)	1
22	00-856490-00005	Lid Assy. (ML-136094) (Incls. Items 16 & 17)	1
23	00-856495-00004	Lid Assy. (ML-136095) (Incls. Items 16 & 17)	1
24	00-856500-00004	Lid Assy. (ML-136096) (Incls. Items 16 & 17)	1

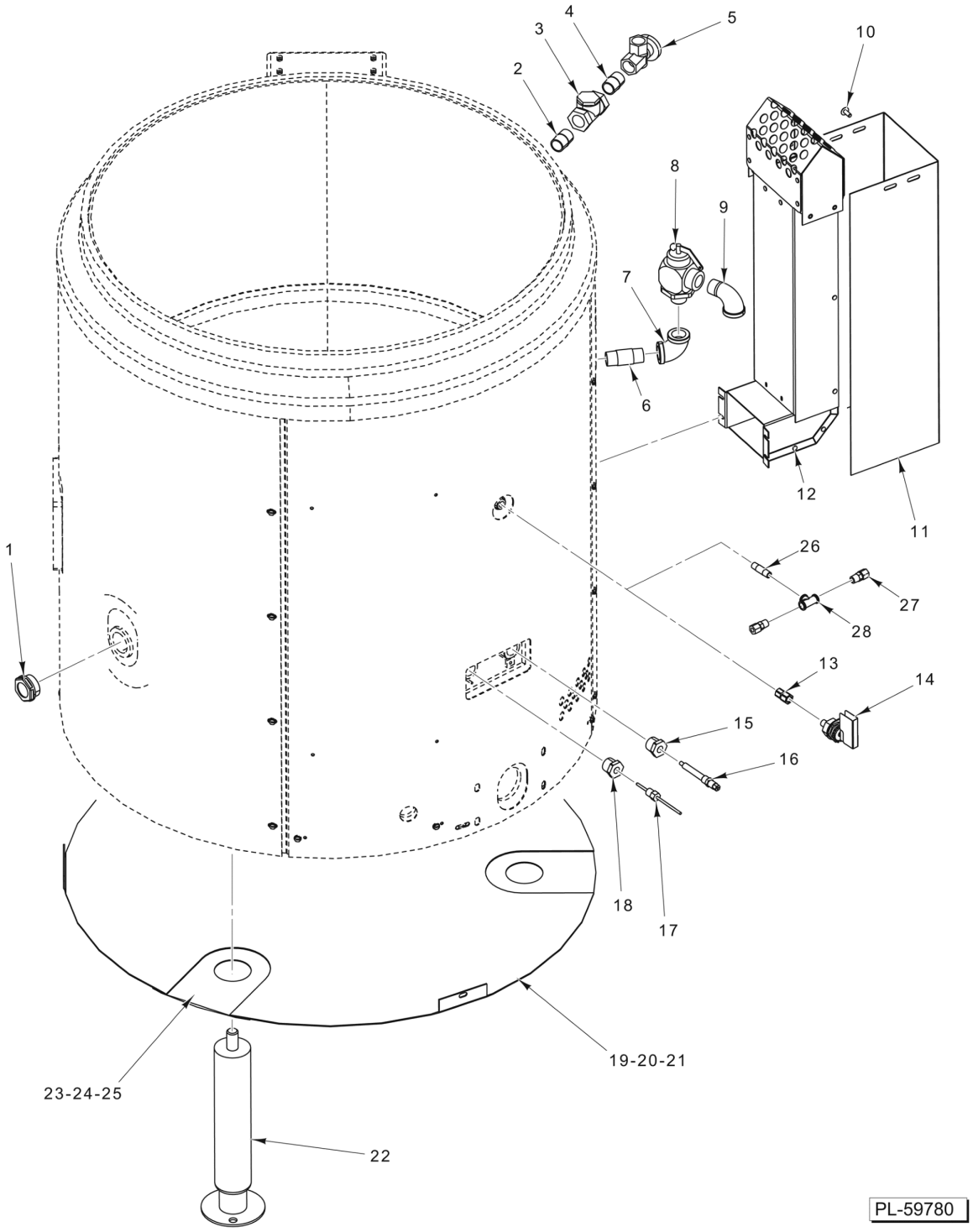

KETTLE EXTERIOR

KETTLE EXTERIOR

ILLUS. PL-59780	PART NO.	NAME OF PART	AMT.
1	00-855882-00001	Glass - Level Sight	1
2	FP-054-08	Pipe 1/2 x 1-1/8 TBE (SST)	1
3	00-833648-00002	Valve - Swing Check (Brass)	1
4	FP-054-08	Pipe 1/2 x 1-1/8 TBE (SST)	1
5	00-833501	Valve 1/2 Angle	1
6	FP-040-50	Pipe 1/2 x 2 TBE (Brass)	1
7	FP-015-16	Elbow - Pipe 1/2 x 90 Deg. (Brass)	1
8	00-855968-00001	Valve - Relief (50 PSI)	1
9	FP-015-17	Elbow - Pipe 1/2 x 90 Deg. (Brass)	1
10	SC-066-06	Mach. Screw 10-24 x 1/2 Phil. Truss Hd. (SST)	4
11	00-856200-00001	Shield - Flue	1
12	00-855833-00001	Flue Assy. (Incls. Items 10 & 11)	1
13	FP-012-10	Fitting - Tube 1/4 (Brass)	1
14	00-856045-00001	Switch - Pressure	1
15	FP-027-06	Bushing - Pipe 1/2 To 1/8 (Brass)	1
16	00-855856-00001	Probe - Water Level	1
17	00-856042-00001	Sensor - Temperature	1
18	FP-027-06	Bushing - Pipe 1/2 To 1/8 (Brass)	1
19	00-856966-00001	Cover - Bottom (ML-136090)	1
20	00-857155-00001	Cover - Bottom (ML-136091)	1
21	00-856988-00001	Cover - Bottom (ML-136092)	1
22	00-856977-00003	Leg - Adjustable (With Flange Foot) (Stationary Kettles Only)	3
23	00-856314-00001	Cover - Leg (ML-136090)	3
24	00-856128-00001	Cover - Leg (ML-136091)	3
25	00-856251-00001	Cover - Leg (ML-136092)	3
26	FP-040-03	Pipe 1/8 x 1-3/8 TBE (Brass) (Tilting Kettles Only)	1
27	FP-012-16	Fitting - Tube (1/4) (Tilting Kettles Only)	2
28	FP-019-02	Tee - Pipe 1/8 x 1/8 x 1/8 (Tilting Kettles Only)	1
	00-855963-00001	Fill Assy. (Incls. Items 2 thru 5)	1
	00-856918-00001	Cover - Bottom (ML-136094)	1
	00-856953-00001	Cover - Bottom (ML-136095)	1
	00-856846-00001	Cover - Bottom (ML-136096)	1

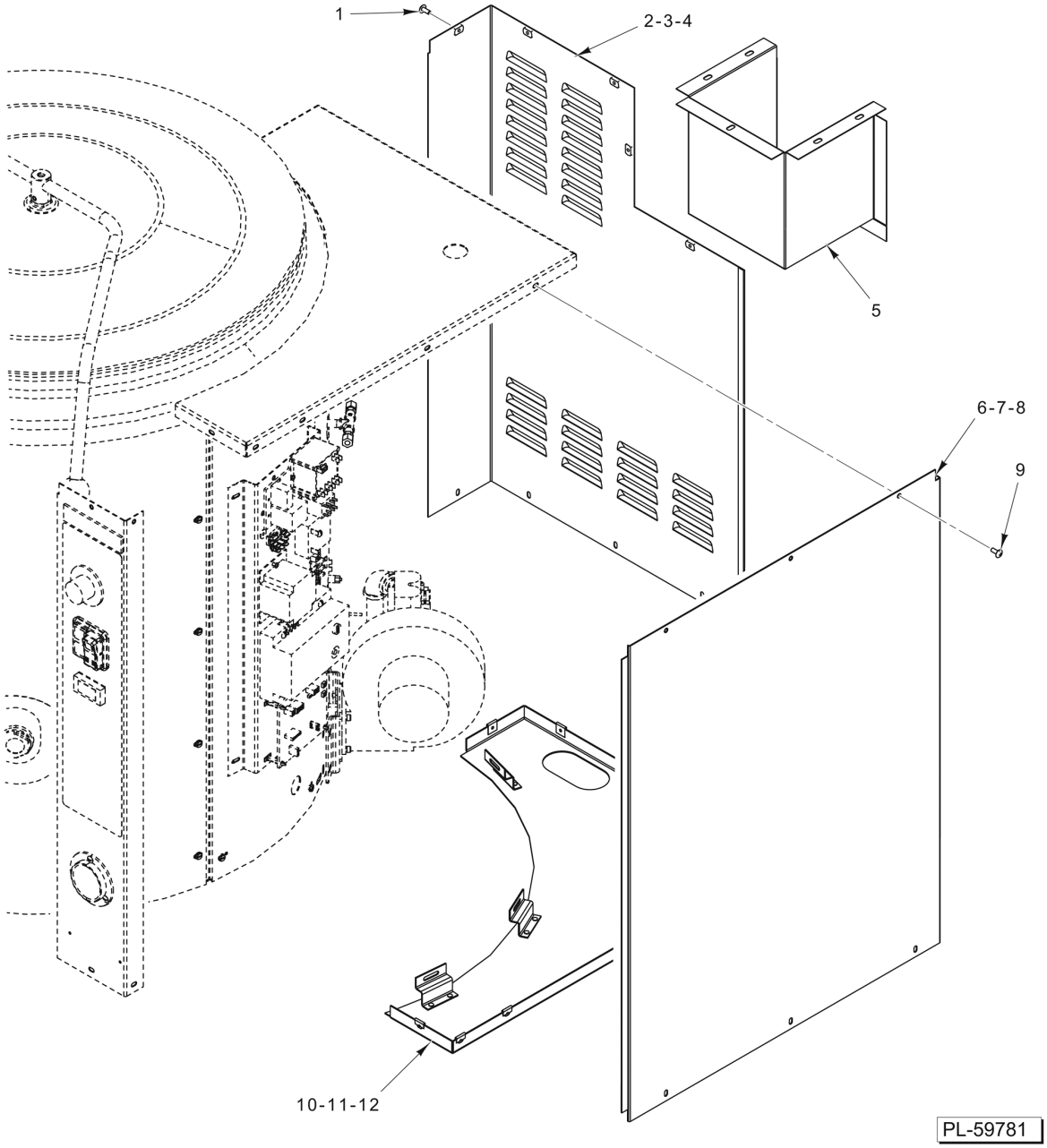

PANELS (STATIONARY)

PANELS (STATIONARY)

ILLUS. PL-59781	PART NO.	NAME OF PART	AMT.
1	SC-066-06	Mach. Screw 10-24 x 1/2 Phil. Truss Hd. (SST)	9
2	00-856313-00001	Panel - Rear (ML-136090)	1
3	00-856047-00001	Panel - Rear (ML-136091)	1
4	00-855979-00001	Panel - Rear (ML-136092)	1
5	00-856206-00001	Bracket - Faucet	1
6	00-856312-00001	Panel - Side (ML-136090)	1
7	00-856044-00001	Panel - Side (ML-136091)	1
8	00-855987-00001	Panel - Side (ML-136092)	1
9	SC-066-06	Mach. Screw 10-24 x 1/2 Phil. Truss Hd. (SST)	6
10	00-855939-00001	Panel - Bottom (ML-136090)	1
11	00-855860-00001	Panel - Bottom (ML-136091)	1
12	00-855918-00001	Panel - Bottom (ML-136092)	1

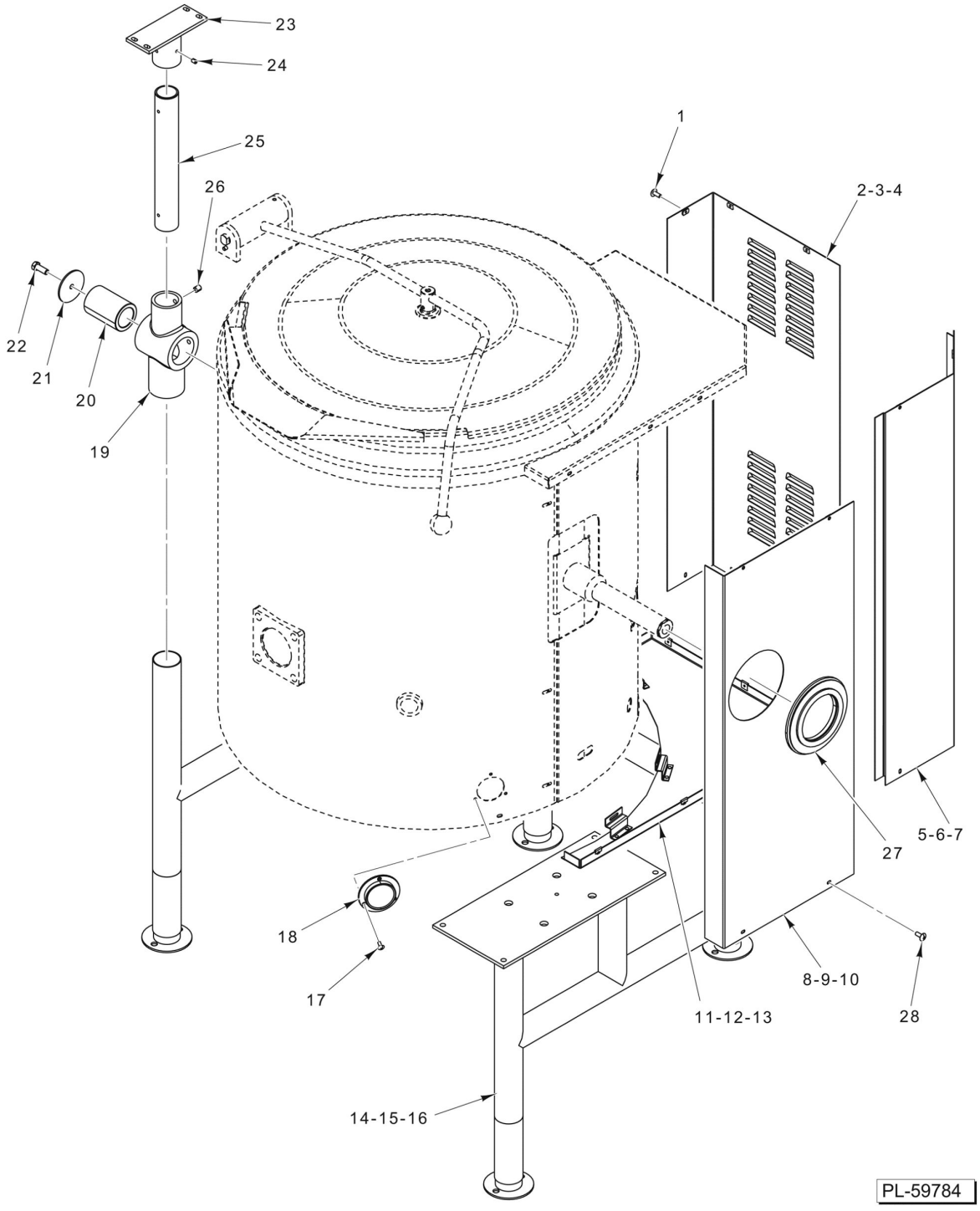

PANELS AND FRAME (TILTING)

PANELS AND FRAME (TILTING)

ILLUS. PL-59784	PART NO.	NAME OF PART	AMT.
1	SC-066-06	Mach. Screw 10-24 x 1/2 Phil. Truss Hd. (SST)	AR
2	00-856368-00001	Panel - Rear (ML-136094)	1
3	00-856943-00001	Panel - Rear (ML-136095)	1
4	00-856130-00001	Panel - Rear (ML-136096)	1
5	00-856369-00001	Panel - Corner (ML-136094)	1
6	00-856219-00001	Panel - Corner (ML-136095)	1
7	00-856129-00001	Panel - Corner (ML-136096)	1
8	00-856373-00001	Panel - Side (ML-136094)	1
9	00-856252-00001	Panel - Side (ML-136095)	1
10	00-856132-00001	Panel - Side (ML-136096)	1
11	00-856912-00001	Panel - Bottom (ML-136094)	1
12	00-857153-00001	Panel - Bottom (ML-136095)	1
13	00-856986-00001	Panel - Bottom (ML-136096)	1
14	00-856892-00001	Frame Assy. (ML-136094)	1
15	00-856929-00001	Frame Assy. (ML-136095)	1
16	00-856801-00001	Frame Assy. (ML-136096)	1
17	SC-129-39	Mach. Screw 6-32 x 5/16 Slotted Oval Hd. (SST)	3
18	00-856083-00001	Gauge - Pressure (Panel Mount)	1
19	00-856178-00002	Casting - Pivot	1
20	00-856180-00001	Bushing	1
21	00-856182-00001	Washer - Retainer	1
22	SC-041-30	Cap Screw 3/8-16 x 1 Hex Hd. (SST)	1
23	00-856510-00001	Bracket - Lid Support	1
24	SC-047-12	Set Screw 1/4-20 x 3/8 Soc. Hdls., Knife Cup Pt	4
25	00-856311	Mast - Lid Support	1
26	SC-047-43	Set Screw 3/8-16 x 1/2 Hex Hdls., Knife Cup Pt	4
27	00-855989-00001	Seal - Shaft	1
28	SD-009-41	Self-Tapping Screw 8-32 x 3/8 Phil. Pan Hd., Type F (SST)	AR
	00-856183-00001	Pivot Assy. (Incls. Items 19, 20, & 26)	1
	00-855882-00001	Glass - Level Sight	1
	00-851318-00001	Flex Line	1