Item # _____ C.S.I. Section 11420

RESTAURANT RANGES

ENDURANCE GAS RESTAURANT RANGE
4 OPEN BURNERS / 24" GRIDDLE
48" WIDE GAS RANGE

Model 48S-4B24GN
(shown with optional casters)

- ☐ **48S-4B24GN** 1 Standard Oven / Natural Gas
- ☐ **48S-4B24GP** 1 Standard Oven / Propane
- ☐ **48C-4B24GN** 1 Convection Oven / Natural Gas
- ☐ **48C-4B24GP** 1 Convection Oven / Propane

STANDARD FEATURES

- Fully MIG welded frame
- Stainless steel front, sides, backriser, lift-off high shelf
- 6" stainless steel adjustable legs
- Four open top burners, each burner is 30,000 BTU/hr. with lift-off burner heads
- Shrouded flash tube pilot system (one pilot per two burners)
- Heavy duty cast grates, easy lift-off 12" x 12½" in front and 12" x 14½" in the rear
- 24" manual griddle, ⅞" thick, 4" wide front grease trough
- Extra deep pull out crumb tray with welded corners
- 35,000 BTU/hr. baker's depth standard oven cavity. Full size sheet pans fit side-to-side or front-to-back.
- Oven thermostat adjusts from 250°F to 500°F
- Heavy duty cool touch oven door handle
- Two oven racks and four rack positions
- 35,000 BTU/hr. convection oven in place of standard oven 24"d x 26⅜"w x 13⅞"h (115v - 1 phase blower motor 4 amp, 6' cord and plug), includes three oven racks. Full size sheet pans only fit side-to-side in convection oven. Convection oven motor requires field attachment.
- 1" rear gas connection and pressure regulator
- One year limited parts and labor warranty

SPECIFICATIONS

48" wide gas restaurant range, Vulcan Model No. 48S-4B24GN. Fully MIG welded aluminized steel frame for added durability. Stainless steel front, sides, backriser, highshelf and 6" adjustable legs. Extra deep crumb tray with welded corners. Four 30,000 BTU/hr. open top burners with lift-off burner heads. Energy saving flashtube open burner ignition system (one pilot for every two burners) shrouded for reliability. Heavy duty cast grates, easy lift-off 12" x 12½" in the front and 12" x 14½" in the back to better accommodate stock pots or large pans. Grates have a built in aeration bowl for greater efficiency. 24" manual griddle, ⅞" thick with 4" wide front grease trough. Burner knobs are cool to the touch, high temperature material. One oven: 35,000 BTU/hr. standard bakers depth ovens with porcelain oven bottom and door panel, measures 27"d x 26⅜"w x 14"h. Oven thermostat adjusts from 250°F to 500°F with a low setting. Oven is supplied with two racks, two rack guide sets, and four rack positions. Oven door is heavy duty with an integrated door hinge/spring mechanism requiring no adjustment. 1" rear gas connections with rear manifold and pressure regulator. Total input 195,000 BTU/hr.

Exterior Dimensions:
34"d x 48"w x 58"h on 6" adjustable legs

ACCESSORIES (Packaged & Sold Separately)

- ☐ Extra oven rack with rack guides
- ☐ Casters (set of four)
- ☐ Flanged feet (set of four)
- ☐ 10" stainless steel stub back
- ☐ Reinforced high shelf for mounting salamander broiler

OPTIONS (Factory Installed)

- ☐ Thermostatically controlled griddle (snap action)

VULCAN
a division of ITW Food Equipment Group LLC
P.O. Box 696 ■ Louisville, KY 40201 ■ Toll-free: 1-800-814-2028 ■ Local: 502-778-2791 ■ Quote & Order Fax: 1-800-444-0602

ENDURANCE GAS RESTAURANT RANGE
4 OPEN BURNERS / 24" GRIDDLE
48" WIDE GAS RANGE

INSTALLATION INSTRUCTIONS

1. A pressure regulator sized for this unit is included. Natural gas 5.0" W.C., propane gas 10.0" W.C.
2. Gas line connecting to range must be 1" or larger. If flexible connectors are used, the inside diameter must be 1" or larger.
3. An adequate ventilation system is required for commercial cooking equipment. Information may be obtained by writing to the National Fire Protection Association, 1 Batterymarch Park, Quincy, MA 02269, www.NFPA.org. When writing, refer to NFPA No. 96.
4. These units are manufactured for installation in accordance with ANSZ223.1A (latest edition), National Fuel Gas Code. Copies may be obtained from The American Gas Association, 400 N Capitol St. NW, Washington, DC 20001, www.AGA.org.
5.

Clearances	Rear	Sides
Combustible	6"	10"
Standard Oven Non-combustible	0"	0"
Convection Oven Non-combustible	Min. 4"	0"

6. For proper combustion, install equipment on adjustable legs or casters provided with unit.

NOTE: In line with its policy to continually improve its product, Vulcan reserves the right to change materials and specifications without notice.

Specify type of gas when ordering.
Specify altitude when above 2,000 feet.

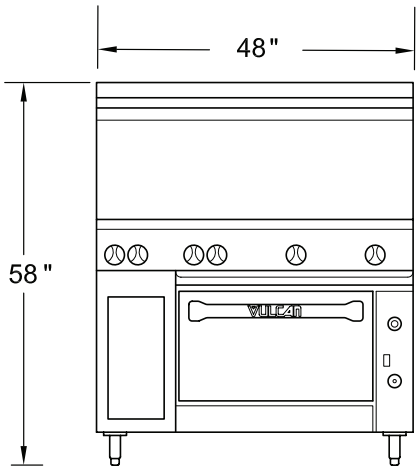

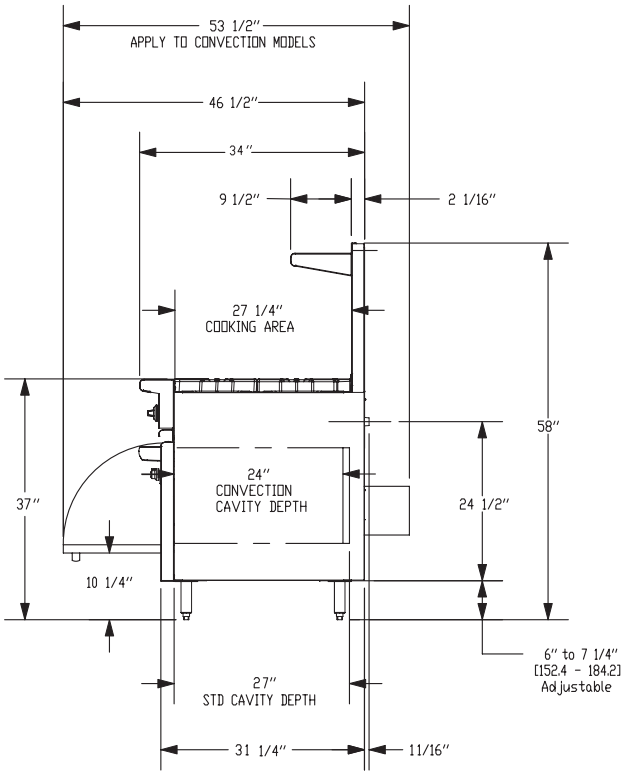

TOP CONFIGURATION	MODEL NUMBER	DESCRIPTION	TOTAL INPUT BTU / HR	SHIPPING WEIGHT LBS / KG
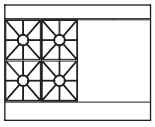	**48S-4B24GN**	1 Standard Oven / 4 Burners / 24" Griddle / Natural Gas	195,000	720 / 327
	48S-4B24GP	1 Standard Oven / 4 Burners / 24" Griddle / Propane	195,000	720 / 327
	48C-4B24GN	1 Convection Oven / 4 Burners / 24" Griddle / Natural Gas	195,000	780 / 355
	48C-4B24GP	1 Convection Oven / 4 Burners / 24" Griddle / Propane	195,000	780 / 355

This appliance is manufactured for commercial use only and is not intended for home use.

a division of ITW Food Equipment Group LLC

P.O. Box 696 ■ Louisville, KY 40201 ■ Toll-free: 1-800-814-2028 ■ Local: 502-778-2791 ■ Quote & Order Fax: 1-800-444-0602

NOTE: In line with its policy to continually improve its products, Vulcan reserves the right to change materials and specifications without notice.

Printed On Recycled Paper