TRUE FOOD SERVICE EQUIPMENT, INC.
2001 East Terra Lane • O'Fallon, Missouri 63366
(636)240-2400 • Fax (636)272-2408 • (800)325-6152 • Intl Fax# (001)636-272-7546
Parts Dept. (800)424-TRUE • Parts Dept. Fax# (636)272-9471 • www.truemfg.com

Project Name: _____
Location: _____
Item #: _____ *Qty:* _____
Model #: _____

AIA #
SIS #

Model:
TBB-24-48FR

Underbar Refrigeration:
Solid Swing Door 24" Food Rated Back Bar Cooler

Scan code for video

TBB-24-48FR

- True's refrigerated back bar coolers are designed with enduring quality and value. Our commitment to using the highest quality materials and oversized refrigeration assures colder product temperatures and years of trouble free service.
- Oversized, factory balanced, refrigeration system holds 33°F to 38°F (.5°C to 3.3°C).
- Exterior - heavy duty, wear resistant laminated black vinyl front and sides. Matching black aluminum back. All stainless steel counter top.
- Interior - stainless steel.
- NSF-7 approved for open food product.
- Positive seal doors.
- Entire cabinet structure and solid doors are foamed-in-place using Ecomate. A high density, polyurethane insulation that has zero ozone depletion potential (ODP) and zero global warming potential (GWP).

ROUGH-IN DATA

Specifications subject to change without notice.
Chart dimensions rounded up to the nearest ⅛" (millimeters rounded up to next whole number).

Model	Doors	Capacity		Shelves	Cabinet Dimensions (inches) (mm)			HP	Voltage	Amps	NEMA Config.	Cord Length (total ft.) (total m)	Crated Weight (lbs.) (kg)
		12 oz. Cans	½ Barrels		L	D†	H						
TBB-24-48FR	2	48 6-pks	2	4	49⅛ 1248	24½ 623	35⅝ 905	⅙ ⅓	115/60/1 230-240/50/1	4.0 3.4	5-15P ▲	7 2.13	305 139

† Depth does not include 1" (26 mm) for rear bumpers.

▲ Plug type varies by country.

MADE IN USA SINCE 1945 · 5 YEAR COMPRESSOR WARRANTY USA · c UL us · NSF

3/13 Printed in U.S.A.

APPROVALS:

AVAILABLE AT:

Model:
TBB-24-48FR

Underbar Refrigeration:
Solid Swing Door 24" Food Rated Back Bar Cooler

STANDARD FEATURES

DESIGN
- True's refrigerated back bar coolers are designed with enduring quality and value. Our commitment to using the highest quality materials and oversized refrigeration assures colder product temperatures and years of trouble free service.

REFRIGERATION SYSTEM
- Factory engineered, self-contained, capillary tube system using environmentally friendly (CFC free) 134A refrigerant.
- Extra large evaporator coil balanced with higher horsepower compressor and large condenser; maintains cabinet temperatures of 33°F to 38°F (.5°C to 3.3°C).
- Sealed, cast iron, self-lubricating evaporator fan motor(s) and larger fan blades give True back bar coolers a more efficient low velocity, high volume airflow design. This unique design ensures faster temperature pull down of warm product, colder holding temperatures and faster recovery in high use situations.
- Condensing unit accessed from behind front grill, slides out for easy cleaning and maintenance.

CABINET CONSTRUCTION
- Exterior - heavy duty, wear resistant laminated black vinyl front and sides. Matching black aluminum back. All stainless steel counter top.
- Interior - stainless steel.
- Insulation - entire cabinet structure and solid doors are foamed-in-place using Ecomate. A high density, polyurethane insulation that has zero ozone depletion potential (ODP) and zero global warming potential (GWP).
- Welded, heavy duty steel frame rail, black powder coated for corrosion protection.

DOORS
- Wear-resistant laminated black vinyl exterior with heavy gauge galvanized steel door liner.
- Each door fitted with 12" (305 mm) long recessed handle that is foamed-in-place with a sheet metal interlock to ensure permanent attachment.
- Positive seal doors.
- Magnetic door gaskets of one piece construction, removable without tools for ease of cleaning.
- Door locks standard.

SHELVING
- Four (4) adjustable, heavy duty, black PVC coated wire shelves 17 ¾"L x 18"D (451 mm x 458 mm). Four (4) chrome plated shelf clips included per shelf.
- Aluminum shelf support pilasters. Shelves are adjustable on ½" (13 mm) increments.

LIGHTING
- Fluorescent interior lighting. Safety shielded.

MODEL FEATURES
- Evaporator is epoxy coated to eliminate the potential of corrosion.
- Designed to accommodate a variety of beer kegs.
- NSF-7 compliant for open food product.

ELECTRICAL
- Unit completely pre-wired at factory and ready for final connection to a 115/60/1 phase, 15 amp dedicated outlet. Cord and plug set included.

115/60/1
NEMA-5-15R

OPTIONAL FEATURES/ACCESSORIES
Upcharge and lead times may apply.
- ❑ 230 - 240V / 50 Hz.
- ❑ 6" (153 mm) standard legs.
- ❑ 6" (153 mm) seismic/flanged legs.
- ❑ 2½" (64 mm) diameter castors.
- ❑ 4" (102 mm) diameter castors.
- ❑ Additional shelves.
- ❑ TrueTrac one liter or wine bottle organizers.
- ❑ TrueTrac 12 oz. (355 ml) bottle organizers.
- ❑ Remote cabinets (condensing unit supplied by others; system comes standard with 404A expansion valve and requires R404A refrigerant). Consult factory technical service department for BTU information. All remote units must be hard wired during installation.

PLAN VIEW

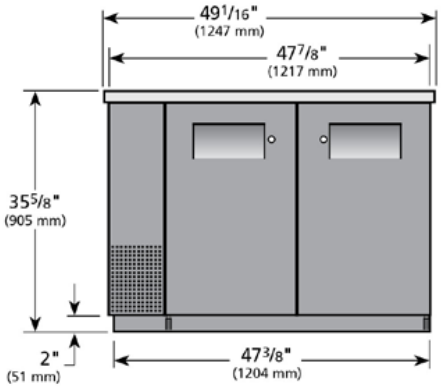

ELEVATION

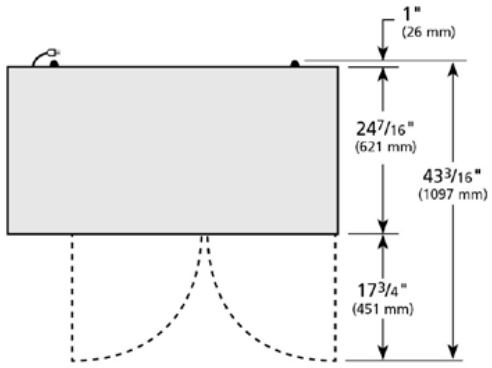

PLAN VIEW

WARRANTY
Three year warranty on all parts and labor and an additional 2 year warranty on compressor. (U.S.A. only)

METRIC DIMENSIONS ROUNDED UP TO THE NEAREST WHOLE MILLIMETER

SPECIFICATIONS SUBJECT TO CHANGE WITHOUT NOTICE

Model	Elevation	Right	Plan	3D	Back
TBB-24-48FR	TFJX55E	TFJX35S	TFJX35P	TFJX553	

TRUE FOOD SERVICE EQUIPMENT
2001 East Terra Lane • O'Fallon, Missouri 63366 • (636)240-2400 • Fax (636)272-2408 • (800)325-6152 • Intl. Fax# (001)636-272-7546 • www.truemfg.com