TRUE FOOD SERVICE EQUIPMENT, INC.
2001 East Terra Lane • O'Fallon, Missouri 63366-4434 • (636)240-2400
Fax (636)272-2408 • Toll Free (800)325-6152 • Intl Fax# (001)636-272-7546
Parts Dept. (800)424-TRUE • Parts Dept. Fax# (636)272-9471 • www.truemfg.com

Project Name: _____
Location: _____
Item #: _____ *Qty:* _____
Model #: _____

AIA #
SIS #

Model:
GDM-49RL-LD

Glass Door Merchandiser:
Swing Door Rear Load Refrigerator with LED Lighting

Scan code for video

GDM-49RL-LD

- The world's #1 manufacturer of glass door merchandisers.
- Oversized, factory balanced, refrigeration system holds 33°F to 38°F (.5°C to 3.3°C).
- Exterior - non-peel or chip white laminated vinyl; durable and permanent.
- Interior - attractive, NSF approved, white aluminum interior liner with stainless steel floor.
- Self closing doors. Positive seal, torsion type closure system.
- "Low-E", double pane thermal insulated glass door assemblies with mitered plastic channel frames. The latest in energy efficient technology.
- LED interior lighting provides more even lighting throughout the cabinet. Safety shielded.
- Entire cabinet structure is foamed-in-place using Ecomate. A high density, polyurethane insulation that has zero ozone depletion potential (ODP) and zero global warming potential (GWP).

Bottom mounted units feature

- "No stoop" lower shelf to maximize product visibility.
- Storage on top of cabinet.
- Easily accessible condenser coil for cleaning.

ROUGH-IN DATA

Specifications subject to change without notice.
Chart dimensions rounded up to the nearest ⅛" (millimeters rounded up to next whole number).

Model	Doors	Shelves	Cabinet Dimensions (inches) (mm) L	D†	H	HP	Voltage	Amps	NEMA Config.	Cord Length (total ft.) (total m)	Crated Weight (lbs.) (kg)
GDM-49RL-LD	2 fr/2 bk	8	54⅛	32⅜	78⅝	½	115/60/1	7.3	5-15P	9	575
			1375	823	1998	½	230-240/50/1	5.4	▲	2.74	261

† Depth does not include 1⅛" (29 mm) for front door handles. Rear doors are solid/swing with recessed handles.

▲Plug type varies by country.

3/14 Printed in U.S.A.

APPROVALS:

AVAILABLE AT:

Model:

GDM-49RL-LD

Glass Door Merchandiser:

Swing Door Rear Load Refrigerator with LED Lighting

STANDARD FEATURES

DESIGN

- True's commitment to using the highest quality materials and oversized refrigeration systems provides the user with colder product temperatures, and lower utility costs in an attractive merchandiser that brilliantly displays packaged food and beverages.

REFRIGERATION SYSTEM

- Factory engineered, self-contained, capillary tube system using environmentally friendly (CFC free) 134A refrigerant.
- Extra large evaporator coil balanced with higher horsepower compressor and large condenser; maintains cabinet temperatures of 33°F to 38°F (.5°C to 3.3°C).
- Sealed, cast iron, self-lubricating evaporator fan motor(s) and larger fan blades give True merchandisers a more efficient low velocity, high volume airflow design. This unique design ensures faster temperature pull down of warm product, colder holding temperatures and faster recovery in high use situations.
- Bottom mounted condensing unit positioned for easy maintenance. "No stoop" lower shelf maximizes visibility by raising merchandised product to higher level.

CABINET CONSTRUCTION

- Exterior - non-peel or chip white laminated vinyl; durable and permanent.
- Interior - attractive, NSF approved, white aluminum liner with stainless steel floor.
- Insulation - entire cabinet structure is foamed-in-place using Ecomate. A high density, polyurethane insulation that has zero ozone depletion potential (ODP) and zero global warming potential (GWP).
- Welded, heavy duty steel frame rail, black powder coated for corrosion protection.
- Frame rail fitted with leg levelers.
- Illuminated exterior sign panel. Variety of sign options available.

DOORS

- Front doors - "Low-E", double pane thermal insulated glass door assemblies with extruded aluminum frames. The latest in energy efficient technology.
- Each front door fitted with 12" (305 mm) long extruded handle.
- Self closing doors. Positive seal, torsion type closure system.
- Magnetic door gaskets of one piece construction, removable without tools for ease of cleaning.

SHELVING

- Eight (8) adjustable, heavy duty PVC coated wire shelves 24 9/16"L x 22 1/8"D (624 mm x 562 mm). Four (4) chrome plated shelf clips included per shelf.
- Shelf support pilasters made of same material as cabinet interior; shelves are adjustable on ½" (13 mm) increments.

LIGHTING

- LED interior lighting provides more even lighting throughout the cabinet. Safety shielded.

MODEL FEATURES

- Evaporator is epoxy coated to eliminate the potential of corrosion.
- See our website www.truemfg.com for latest color and sign offerings.
- Convenient clean-out drain built in cabinet floor.
- Listed under NSF-7 for the storage and/or display of packaged or bottled product.

ELECTRICAL

- Unit completely pre-wired at factory and ready for final connection to a 115/60/1 phase, 15 amp dedicated outlet. Cord and plug set included.

115/60/1
NEMA-5-15R

OPTIONAL FEATURES/ACCESSORIES

Upcharge and lead times may apply.

- ❑ 230 - 240V / 50 Hz.
- ❑ Black exterior.
- ❑ Stainless steel exterior.
- ❑ Black aluminum interior liner with black shelving.
- ❑ Stainless steel interior liner.
- ❑ 6" (153 mm) standard legs.
- ❑ 6" (153 mm) seismic/flanged legs.
- ❑ 2½" (64 mm) diameter castors.
- ❑ 4" (102 mm) diameter castors.
- ❑ Red wine thermostat.
- ❑ White wine thermostat.
- ❑ Chocolate thermostat.
- ❑ Padlock.
- ❑ Wine racks.
- ❑ Additional shelves.
- ❑ TrueFlex gravity feed organizers.
- ❑ Pricing strips.
- ❑ Remote cabinets (condensing unit supplied by others; system comes standard with 404A expansion valve and requires R404A refrigerant). Consult factory technical service department for BTU information. All remote units must be hard wired during installation.

PLAN VIEW

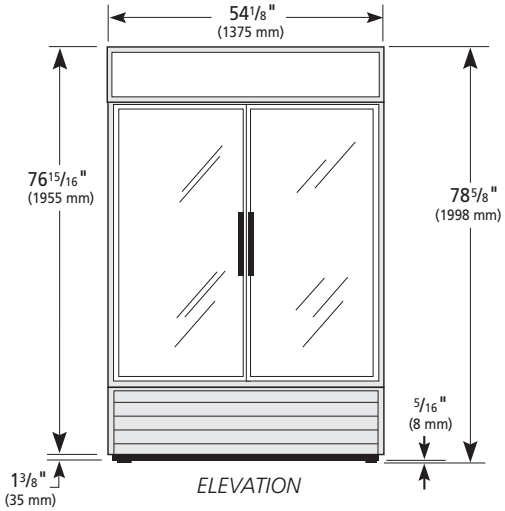

ELEVATION

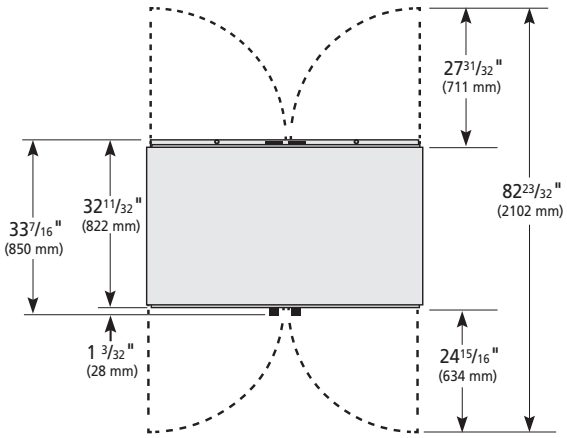

PLAN VIEW

WARRANTY
Three year warranty on all parts and labor and an additional 2 year warranty on compressor. (U.S.A. only)

METRIC DIMENSIONS ROUNDED UP TO THE NEAREST WHOLE MILLIMETER

SPECIFICATIONS SUBJECT TO CHANGE WITHOUT NOTICE

Model	Elevation	Right	Plan	3D	Back
GDM-49RL-LD	TFAY03E	TFAY14S	TFAY14P	TFAY143	

TRUE FOOD SERVICE EQUIPMENT

2001 East Terra Lane • O'Fallon, Missouri 63366-4434 • (636)240-2400 • Fax (636)272-2408 • Toll Free (800)325-6152 • Intl. Fax# (001)636-272-7546 • www.truemfg.com