T&S BRASS AND BRONZE WORKS, INC.

2 Saddleback Cove / P.O. Box 1088
Travelers Rest, SC 29690

REG. #A2601
ISO #9001

Travelers Rest, SC: 800-476-4103 • Simi Valley, CA: 800-423-0150 • Fax: 864-834-3518 • www.tsbrass.com

Model No.
002712-40

Item No.

This Space for Architect/Engineer Approval

Job Name_____Date_____

Model Specified_____ Quantity_____

Customer/Wholesaler_____

Contractor_____

Architect/Engineer_____

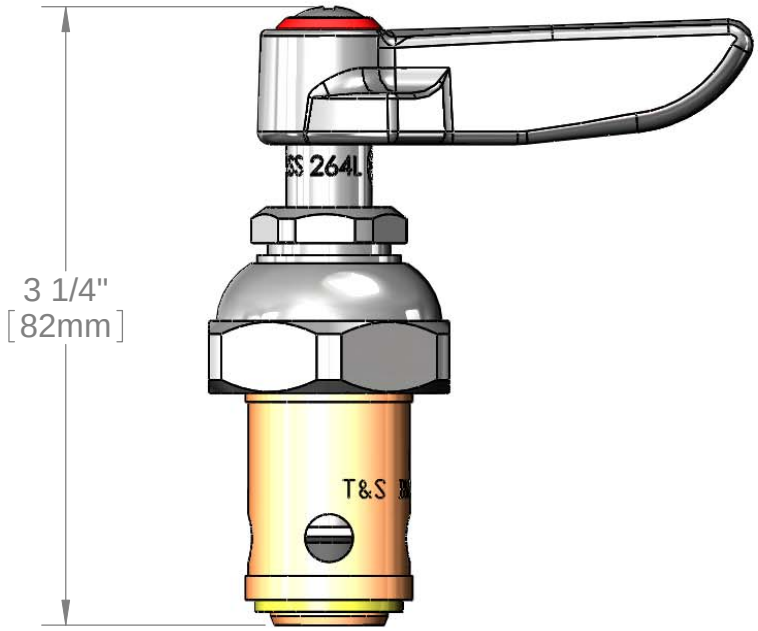

Product Specifications:
Eterna Spindle (RH) Hot w/ Spring Check, Lever Handle, Index (Red) & Screw

Drawn	Checked	Approved
DHL	KJG	JHB
Scale: 1:1		Date: 02/07/11