Jackson

TempStar™ HH

Project _____
Item _____
Quantity _____
CSI Section 11400 _____
Approval _____
Date _____

Door Type

Models

☐ TempStar™ HH

Standard Features

- Sani-Sure™ feature assures proper rinse water temperature
- Multi-cycle timer (Extra Heavy, Heavy, Medium, Normal)
- Extended 15 sec. high-temperature rinse provides superior coverage and rapid drying
- 20-3/4" wide X 27" high (527 mm X 686 mm) opening accommodates 18" X 26" (457 mm X 660 mm) sheet pans and 60-quart mixing bowls
- Auto-fill / auto-start
- Safety door switch
- Delime/manual wash switch
- Low watt density electric wash tank heater
- Hi-limit thermostat and low water protection
- Adjustable bullet feet
- Uses standard 20" X 20" (508 mm X 508 mm) racks
- Front dress panel
- Detergent/rinse additive signal connection fuse box
- Built-in 70° F (21° C) rise booster heater is standard; 40° (4° C) rise booster is available but must be specified at time of order
- Lower counter-rotating wash arms and upper wash arm provide optimum spray coverage and superior cleaning action
- Self-draining stainless steel pump
- Split-door design accommodates installations with low ceiling heights
- Large scrap tray

Mandatory Specs

☐ Specify voltage_____
☐ Specify booster size_____
Specify: ☐ Electric ☐ Steam

Optional Features

☐ Optional 40° F (4° C) rise booster heater is available at no additional cost (must be specified)
☐ Drain Quench System
☐ Scaltrol
☐ Flanged Feet
☐ Water Hammer Arrestor
☐ 480V
☐ Security Package
☐ False Panel
☐ Safety Door Interlock
☐ Steam Booster Heater

Accessories

☐ 36-Compartment Rack
  ☐ 4-1/8" tall (104 mm)
  ☐ 5-5/8" tall (143 mm)
  ☐ 7" tall (178 mm)
☐ Combination Rack
☐ Peg Rack
☐ Sheet Pan Rack - for 18" x 26" (457 mm X 660 mm) baking pans

Specifications

Uses 1.36 gallons (5 liters) of 180˚F (82˚C) water per rack

Total automatic (normal) cycle - 62 seconds

53 racks per hour normal cycle

2hp Wash Pump Motor

Single Point connections for all utilities

Built-in water pressure regulator and gauge

Field convertible from straight through to corner and vice versa

Heavy duty stainless steel construction

c UL us LISTED

NSF

SHIPPING ADDRESS
6209 North U.S. Highway 25E
Gray, KY 40734

MAILING ADDRESS
P. O. Box 1060
Barbourville, KY 40906

Tel: 606-523-9795
Tel: 1-888-800-5672
Fax: 606-523-1799

www.jacksonmsc.com
E-mail: customerservice@jacksonmsc.com

07610-002-66-60B (08-09)

Manitowoc

Jackson
TempStar™ HH

LEGEND

A - DRAIN 1 1/2" IPS
B - WATER INLET 3/4" IPS
C - ELECTRICAL CONNECTION

All vertical dimensions are +/- 1/2" due to adjustable bullet feet.

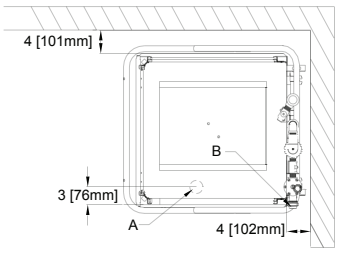

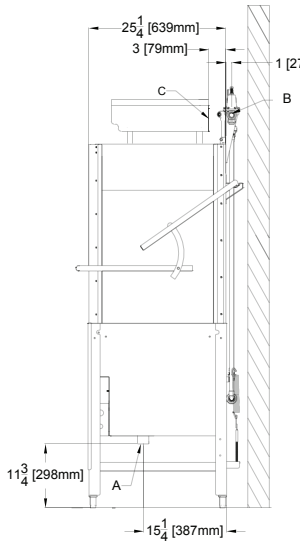

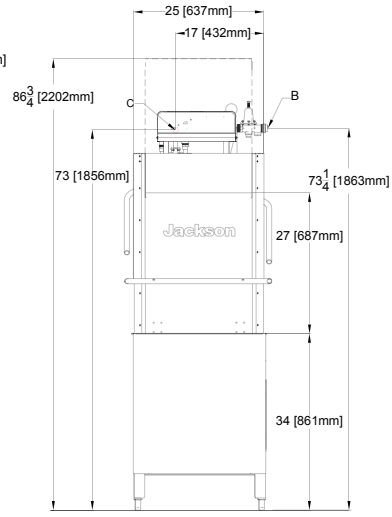

MODEL NO.	MACHINE DIMENSIONS			DRAIN HEIGHT	SHIPPING INFORMATION					
	HEIGHT	WIDTH	DEPTH		WEIGHT	CLASS	CUBE	HEIGHT	WIDTH	DEPTH
TempStar™HH	76-3/4″ (1949 mm)	25-1/4″ (641 mm)	25-1/4″ (641 mm)	11-3/4″ (298 mm)	420 lbs (191 kg)	92.5	74.9 cu. ft.	80″ (2032 mm)	49″ (1245 mm)	33″ (838 mm)

DIMENSION REQUIREMENTS	
Minimum Ceiling Height (Recommended)	88″ (2 meters)
Wall Clearance (Minimum)	4″ (102 mm)
Standard Table Height	34″ (864 mm)
Inside Clearance	17-1/4″ (438 mm)

OPERATING CAPACITY				
Racks per Hour	Normal 53	Medium 28	Heavy 19	Extra Heavy 11
OPERATING CYCLE (sec)	Wash	Rinse	Dwell	Total Cycle
Normal	45	15	2	62
Medium	103	15	2	120
Heavy	163	15	2	180
Extra Heavy	283	15	2	300

OPERATING TEMPERATURES	
Wash (Minimum)	150˚F (66˚C)
Rinse (Minimum)	180˚F (82˚C)

WASH PUMP MOTOR		
Wash Pump Motor		2 hp
	Volts	KW
Electric Wash Tank Heater	208V	4.1
	230V	5.0
	460V	5.0
Electric Rinse Tank Heater 40˚F (4˚C) Rise	208V	9.0
	230V	11.0
	460V	11.0
70˚F (21˚C) Rise	208V	10.5
	230V	12.9
	460V	12.9

STEAM REQUIREMENTS	
Steam Flow Pressure (PSIG)	15-20
Consumption @ 15 PSIG (lbs/hr)	45

WATER REQUIREMENTS	
Inlet Tempterature	
40˚F / (4˚C) Rise	140˚F (82˚C)
70˚F / (21˚C) Rise	110˚F (60˚C)
Gallons per hour	72.1 gal (273 L)
Gallons per rack	1.36 gal (5 L)
Waterline Size IPS (Minimum-inches)	3/4″
Drainline Size IPS (Minimum-Inches)	1-1/2″
Waterline Flow Rate (GPM)	5.44
Flow Pressure (PSI)	15-25
Tank Capacity	3 gal (11 L)
Wash Tank	8 gal (30 L)
Booster Tank	3 gal (11 L)

APPROXIMATE LOAD AMPS		
	40˚F (4˚C) Rise	70˚F (21˚C) Rise
Power Supply	AMPS	AMPS
208V/60HZ/1PH	74.2	81.4
208V/60HZ/3PH	47.6	51.8
230V/60HZ/1PH	80.9	89.0
230V/60HZ/3PH	51.4	56.2
460V/60HZ/3PH	23.4	25.8

How To Specify - TempStar™ HH

SHIPPING ADDRESS
6209 North U.S. Highway 25E
Gray, KY 40734

MAILING ADDRESS
P. O. Box 1060
Barbourville, KY 40906

Tel: 606-523-9795
Tel: 1-888-800-5672
Fax: 606-523-1799

www.jacksonmsc.com
E-mail: customerservice@jacksonmsc.com

07610-002-66-60B(08-09)

Manitowoc

We reserve the right to change specifications appearing in this bulletin without incurring any obligation for equipment previously or subsequently sold.