Parts Catalog

Model GEG24

MEDIUM DUTY ELECTRIC COUNTERTOP GRIDDLES

MODELS:
GEG24, GEG36 & GEG48

10-14-2011
IMPORTANT!
TO EXPEDITE SHIPMENT OF PARTS, ALWAYS SPECIFY MODEL, REV, PART NUMBER, AND SERIAL NUMBER OF SLICER.

GLOBE FOOD EQUIPMENT COMPANY

2215 East River Road
Dayton, Ohio 45439

Parts Department
Toll Free 1-800-745-6238 · Fax (937) 290-0585
E-Mail: globeinfo@globeslicers.com
Website: www.globeslicers.com

Not for resale

TABLE OF CONTENTS

GEG24 COMPONENTS	1 - 4
GEG36 COMPONENTS	5 - 8
GEG48 COMPONENTS	9 - 12

GEG24 ELECTRIC GRIDDLE COMPONENTS

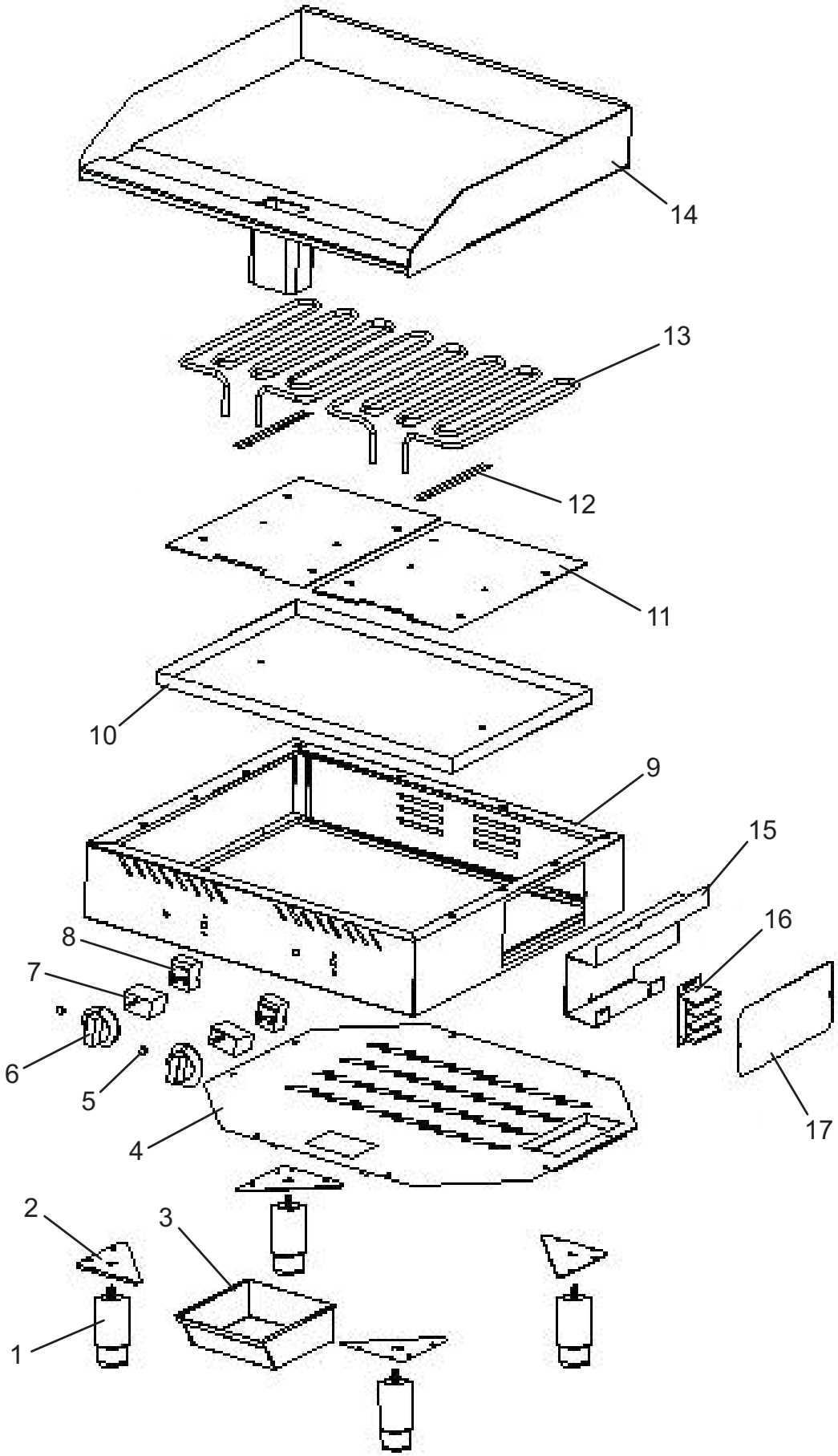

GEG24 PARTS LIST

Item	Description	Part Number	Qty
1	Foot, Adjustable - SS	U01021005165	4
2	Plate, Foot Support	-	4
3	Drip Tray	U01051025574	1
4	Plate, Base	U06051470499	1
5	Indicator Light	U03091240006	2
6	Knob	U02101155013	2
7	Switch, ON/OFF	U03041215033	2
8	Thermostat	U03051220048	2
9	Enclosure Assembly	-	1
10	Plate, Insulation	U01071040229	1
11	Plate, Element	U01991090036	2
12	Plate, Sensor	U01051027329	2
13	Heating Element	U03061225104	2
14	Plate, Griddle	-	1
15	Box, Connection	-	1
16	Bar, Connection	U03081235018	1
17	Cover, Connection Box	U01051027359	1

GEG24 ELECTRIC GRIDDLE SCHEMATIC

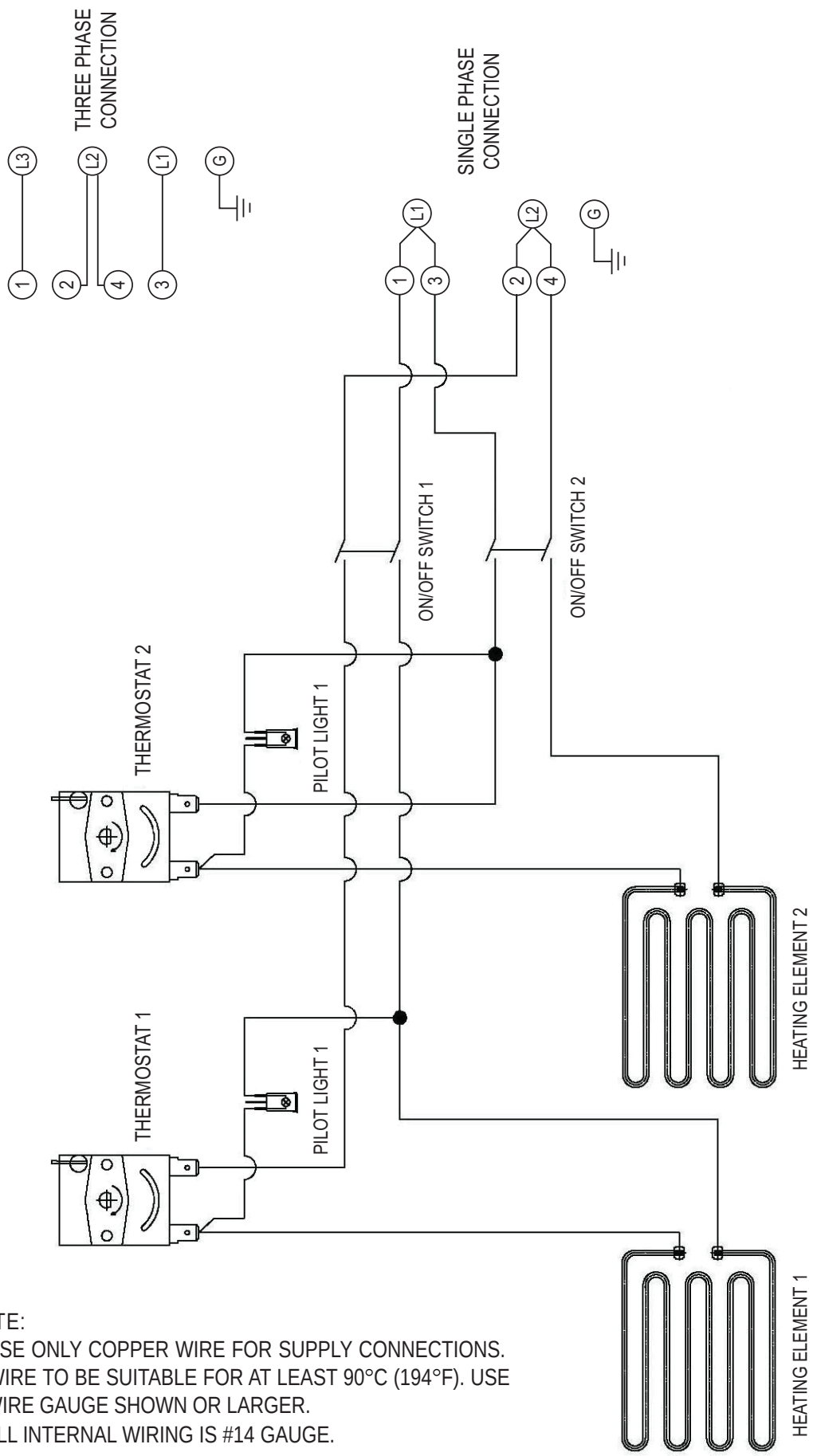

NOMINAL AMPS PER LINE									
208V ~ 3 PHASE			240V ~ 3 PHASE			208V	240V
4,200 WATTS			5,600 WATTS			1 PH	1 PH
L1	L2	L3	L1	L2	L3		
10.1	17.49	10.1	11.67	20.21	11.67	20.19	23.33
AWG #14	AWG #10	AWG #14	AWG #14	AWG #10	AWG #14	AWG #10	AWG #10

NOTE:

1. USE ONLY COPPER WIRE FOR SUPPLY CONNECTIONS. WIRE TO BE SUITABLE FOR AT LEAST 90°C (194°F). USE WIRE GAUGE SHOWN OR LARGER.
2. ALL INTERNAL WIRING IS #14 GAUGE.

GEG36 ELECTRIC GRIDDLE COMPONENTS

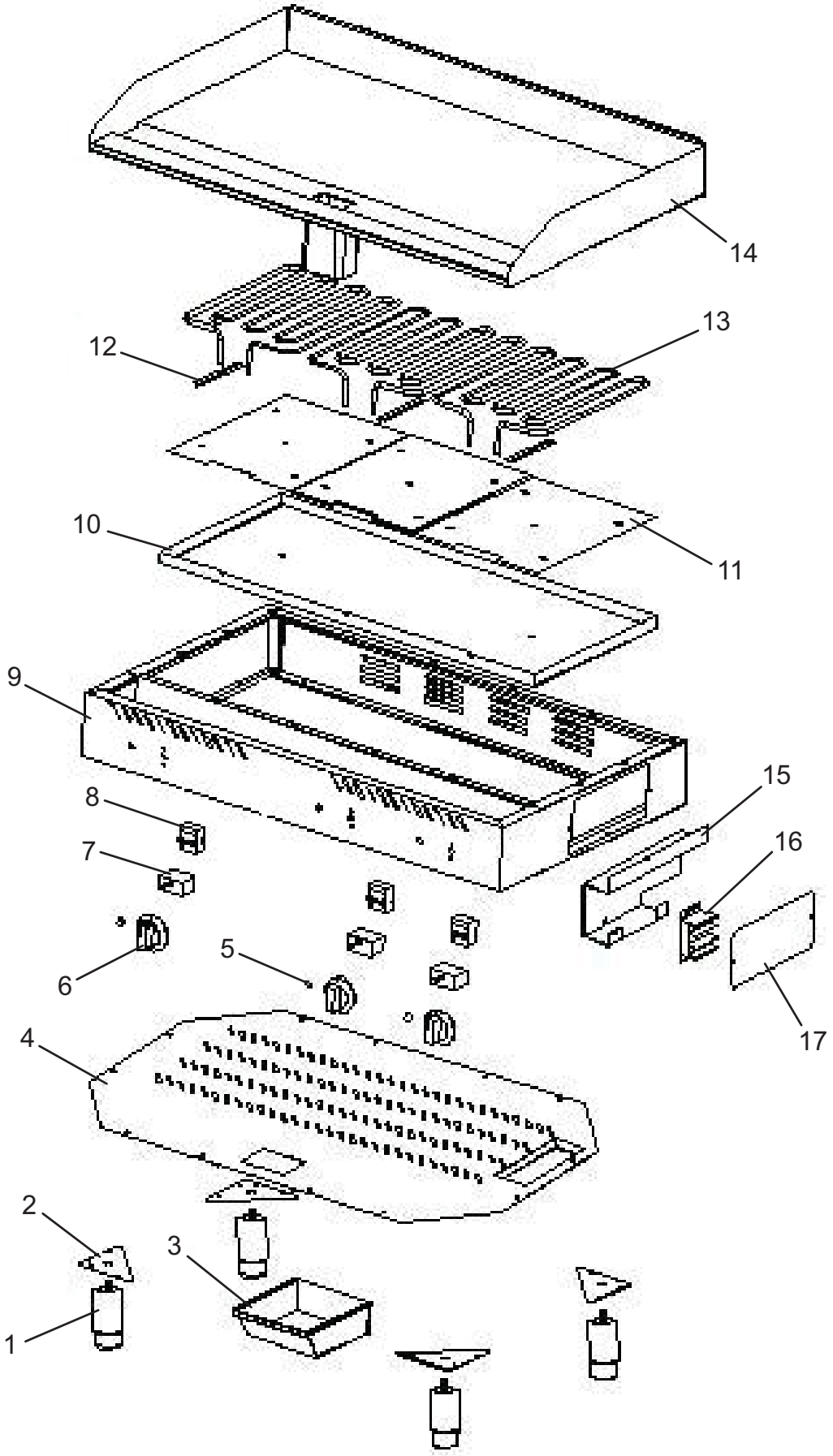

GEG36 PARTS LIST

Item	Description	Part Number	Qty
1	Foot, Adjustable - SS	U01021005165	4
2	Plate, Foot Support	-	4
3	Drip Tray	U01051025574	1
4	Plate, Base	U06051470641	1
5	Indicator Light	U03091240006	3
6	Knob	U02101155013	3
7	Switch, ON/OFF	U03041215033	3
8	Thermostat	U03051220048	3
9	Enclosure Assembly	-	1
10	Plate, Insulation	U01071040230	1
11	Plate, Element	U01991090036	3
12	Plate, Sensor	U01051027329	3
13	Heating Element	U03061225104	3
14	Plate, Griddle	-	1
15	Box, Connection	-	1
16	Bar, Connection	U03081235018	1
17	Cover, Connection Box	U01051027359	1

GEG36 ELECTRIC GRIDDLE SCHEMATIC

NOTE:
1. USE ONLY COPPER WIRE FOR SUPPLY CONNECTIONS. WIRE TO BE SUITABLE FOR AT LEAST 90°C (194°F). USE WIRE GAUGE SHOWN OR LARGER.
2. ALL INTERNAL WIRING IS #14 GAUGE.

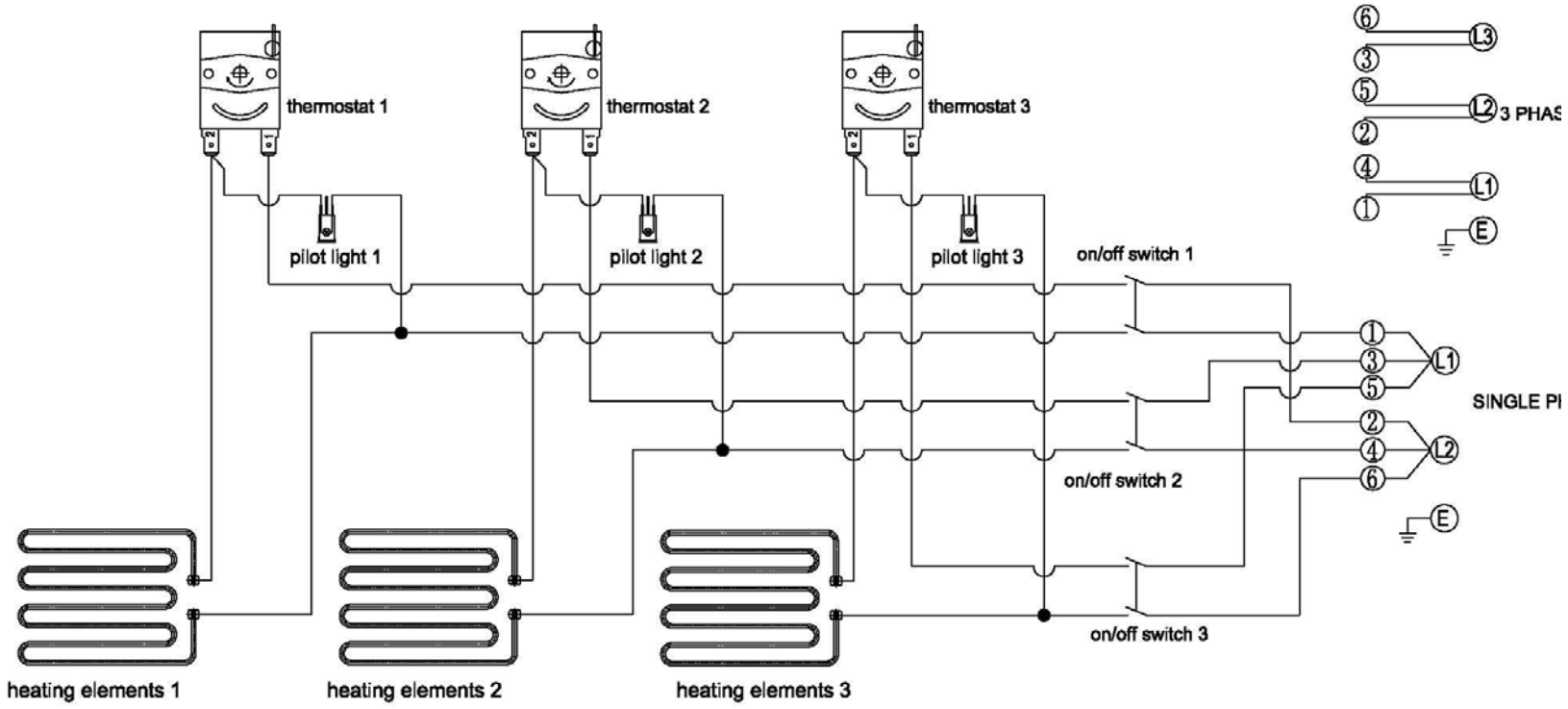

NOMINAL AMPS PER LINE							
208V ~ 3 PHASE			240V ~ 3 PHASE			208V	240V
6,300 WATTS			8,400 WATTS			1 PH	1 PH
L1	L2	L3	L1	L2	L3		
17.49	17.49	17.49	20.21	20.21	20.21	30.29	35
AWG #10	AWG #10	AWG #10	AWG #10	AWG #10	AWG #10	AWG #8	AWG #6

GEG48 ELECTRIC GRIDDLE COMPONENTS

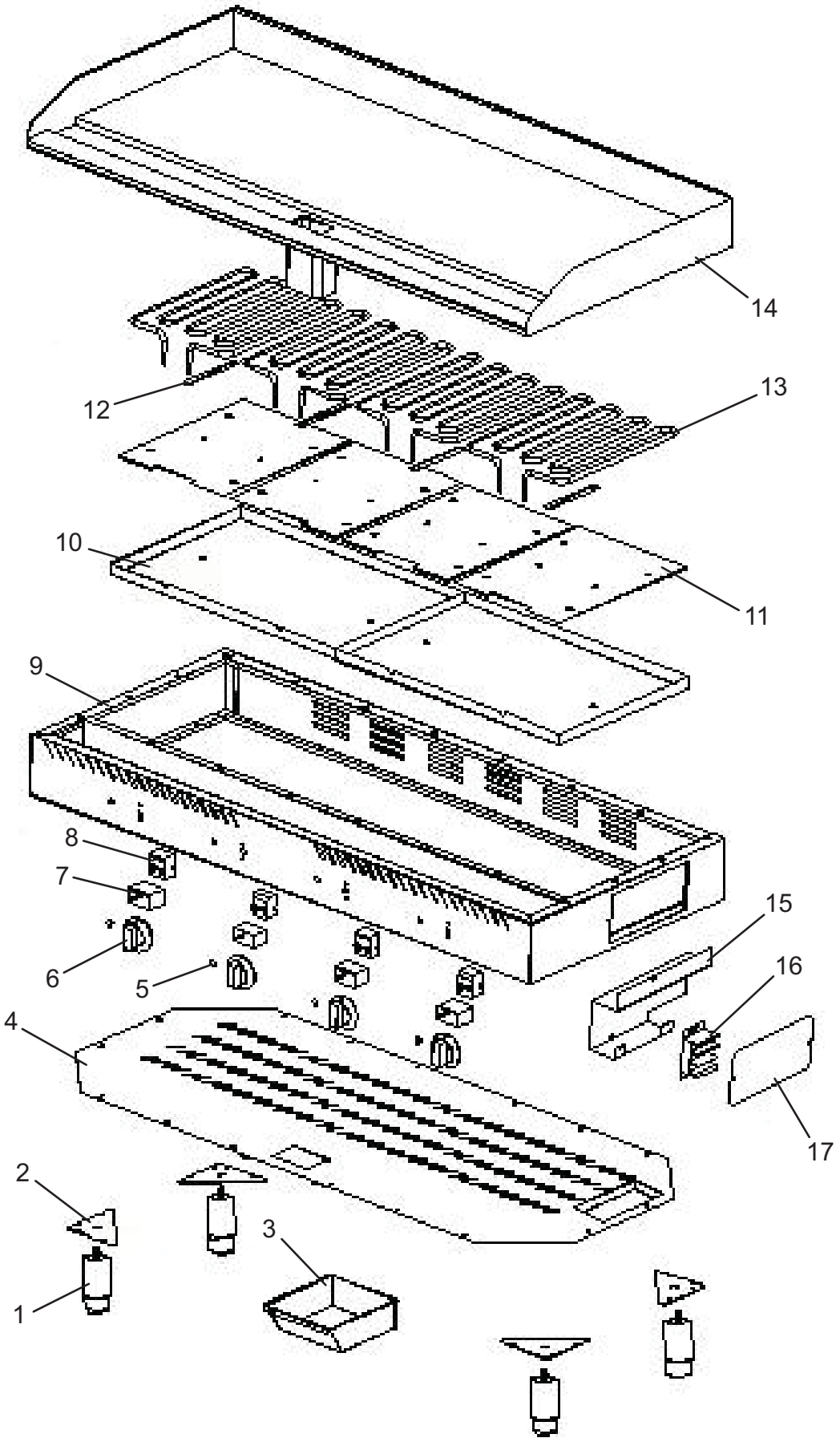

Item	Description	Part Number	Qty
1	Foot, Adjustable - SS	U01021005165	4
2	Plate, Foot Support	-	4
3	Drip Tray	U01051025574	1
4	Plate, Base	U06051470662	1
5	Indicator Light	U03091240006	4
6	Knob	U02101155013	4
7	Switch, ON/OFF	U03041215033	4
8	Thermostat	U03051220048	4
9	Enclosure Assembly	-	1
10	Plate, Insulation	U01071040229	2
11	Plate, Element	U01991090036	4
12	Plate, Sensor	U01051027329	4
13	Heating Element	U03061225104	4
14	Plate, Griddle	-	1
15	Box, Connection	-	1
16	Bar, Connection	U03081235018	1
17	Cover, Connection Box	U01051027359	1

GEG48 ELECTRIC GRIDDLE SCHEMATIC

NOTE:

1. USE ONLY COPPER WIRE FOR SUPPLY CONNECTIONS. WIRE TO BE SUITABLE FOR AT LEAST 90°C (194°F). USE WIRE GAUGE SHOWN OR LARGER.
2. ALL INTERNAL WIRING IS #14 GAUGE.

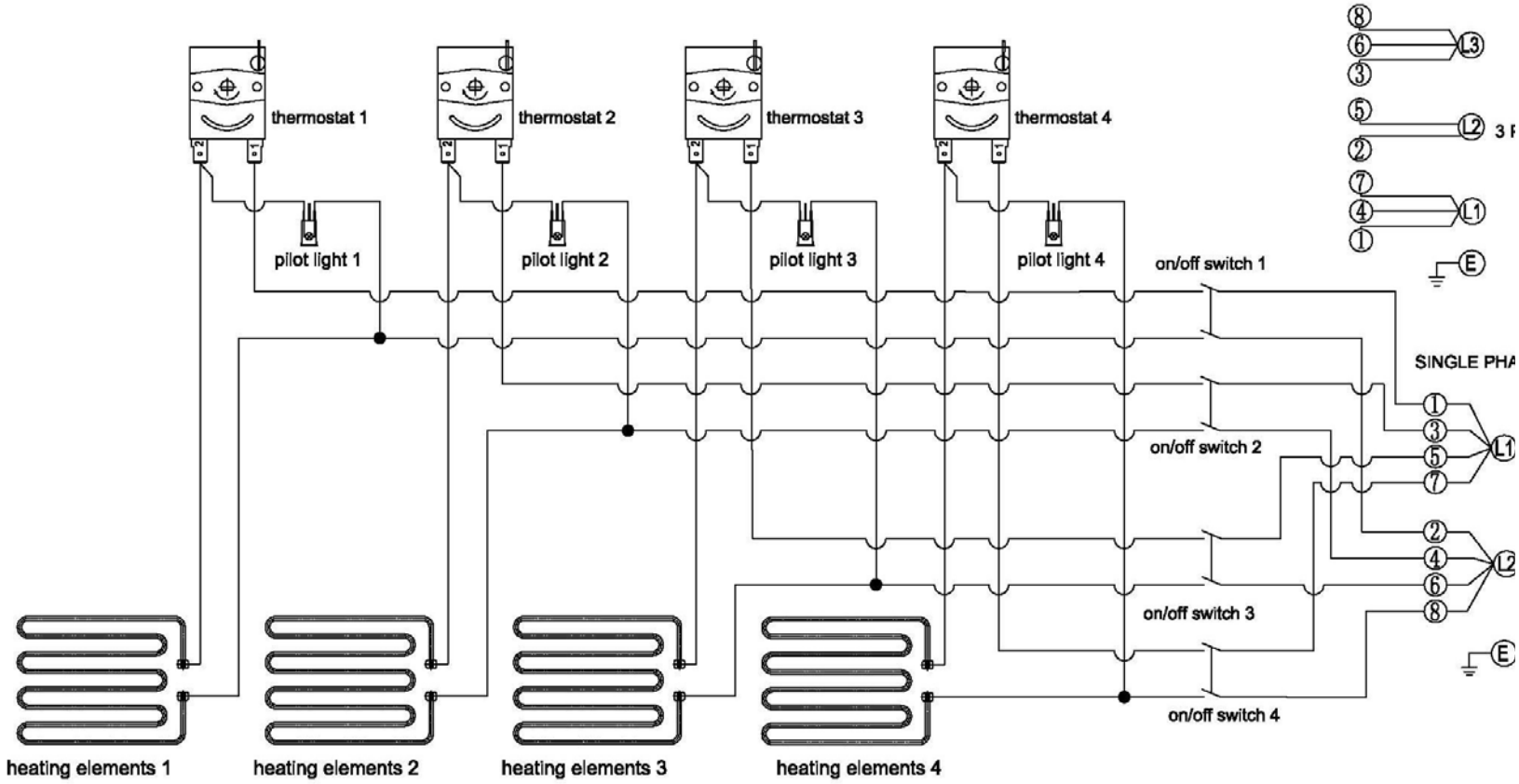

NOMINAL AMPS PER LINE							
208V ~ 3 PHASE			240V ~ 3 PHASE			208V	240V
8,400 WATTS			11,200 WATTS			1 PH	1 PH
L1	L2	L3	L1	L2	L3		
26.71	17.49	26.71	30.87	20.21	30.87	40.38	46.67
AWG #8	AWG #10	AWG #8	AWG #8	AWG #10	AWG #8	AWG #6	AWG #4