JOB: _____

ITEM NO: _____

INSULATED HOT CABINET MODEL H-137-UA-12C

H-137-UA-12C

FEATURES AND BENEFITS:

- Fully insulated hot cabinet keeps prepared foods at serving temperatures.
- Powerful, yet efficient, 1500 Watt heating system maintains the right temperature to properly hold products. Heats up to 200˚F. (93˚C.).
- Self-contained power top allows interior of cabinet to be hosed-out during cleaning.
- Internal frame in body and doors maintains structural rigidity.
- Body constructed of non-corrosive, Hi-Tensile aluminum for strength and ease of mobility. One piece extended base protects cabinet body.
- Smooth interior coved corners prevent food particle/grease buildup.
- Safety-conscious anti-microbial latches protect against spreading germs.
- Self-closing insulated Dutch doors prevent temperature loss; magnetic door gaskets for proper seal. Field reversible for flexibility.
- Standard with right hand hinging; left hand hinging available upon request.
- Full length anti-microbial extruded door handles for “easy open”; positive catch secures door during transport.
- Recessed push/pull handles on both sides prevents damage to walls; allows easy maneuvering.
- Twelve sets of chrome plated wire universal angles accommodate a large variety of pan sizes on adjustable 1-1/2" centers.
- Heavy duty 5" swivel casters, two with brakes. Provides mobility when fully loaded.

ACCESSORIES and OPTIONS (Available at extra cost):

- ❑ Tempered Glass Door Windows
- ❑ Extra Universal Angles
- ❑ Change from standard chrome plated wire angles to angles designed for transporting
- ❑ Change from chrome plated wire angles to extruded aluminum or formed stainless steel angles.
- ❑ Corner Bumpers
- ❑ Perimeter Bumper
- ❑ Floor Lock (for use with 5" casters)
- ❑ Various Caster Options
- ❑ Removable Cord Set
- ❑ 208 or 240 Volt Service
- ❑ Food Safe Digital Thermometer
- ❑ Magnetic Door Latch
- ❑ Upgrade to 2000 Watt Power Unit

See page B-20 for accessory details.

5925 Heisley Road • Mentor, OH 44060-1833
Phone: 877/CRESCOR • Fax: 440/350-7267
www.crescor.com

H-137-UA-12C

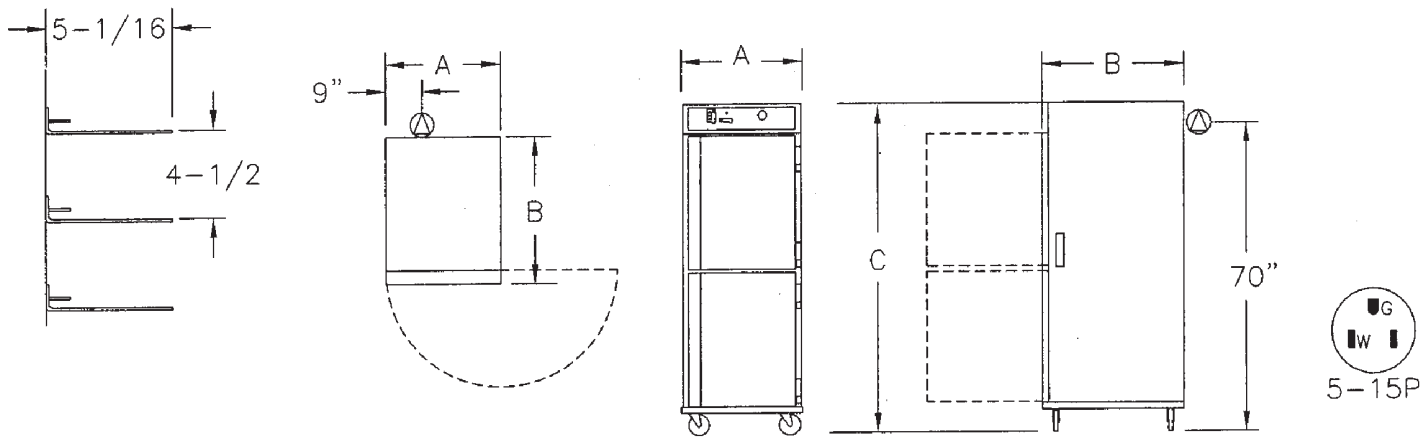

CRES COR MODEL NO.	PAN			DIM "A"	DIM "B"	DIM "C"	INSIDE DIMENSIONS				WEIGHT ACT.
	CAP/ANGLES	SIZE		WIDTH	DEPTH	HEIGHT	WIDTH	DEPTH	HEIGHT		
H-137-UA-12C	12 SETS	SEE NOTE BELOW	IN	28-3/4	34-3/16	73	22	27-1/2	58	LBS	255
			MM	730	870	1855	560	700	1475	KG	116

NOTES: 1. Pan sizes 22" x 20" (560 x 510) Roast & Bake Pans, 10" x 20" (255 x 510) Roast & Bake Pans, 18" x 26" (460 x 660) Bun Pans, 14" x 18" (355 x 460) Service Trays, 12" x 20" (305 x 510) Steam Table Pans. Refer to Pan Size Chart at end of section.
2. When ordering bumpers, add 2" to overall dimensions.

ALL CONSTRUCTION IS RIVETED, WELDED AND FINISHED.

CABINET:
- Body: .063 aluminum.
- Reinforcement: Internal framework of 18 ga. 304 stainless steel.
- Insulation: Fiberglass, thermal conductivity (K factor) is .23 at 75˚F. 1-1/2" in doors, top, base; 2" in sidewalls.
- Air tunnel: 22 ga. 304 stainless steel; lift-out type, mounted on back.
- Push/pull handles (2): 5” vertical; recessed.
- Interior coved corners.

BASE:
- One piece construction, .125 aluminum.
- Casters: 5" dia., swivel, modulus tires, 1-1/4 wide, load cap.
- 250 lbs. each, temp. range -45˚/+180˚F. Delrin bearings. Front casters equipped with brakes.

DUTCH DOORS:
- Field reversible.
- Exterior: .063 brushed aluminum.
- Interior: 22 ga. 430 stainless steel.
- Latches: Positive transport type with lock hasp.
- Extruded handles.
- Hinges: Self closing, stays open past 90˚.
- Gaskets: Perimeter type, magnetic Santoprene.
- Pan stops.

PAN SLIDES:
- Wire angles (.306 dia.), nickel chrome plated steel, mounted on lift-off posts.
- Spaced on 4-1/2" centers; adjustable on 1-1/2" centers.

HOT UNIT COMPONENTS:
- Top mounted; removable with tools.
- Thermostat: Mechanical, room ambient to 200˚F (93˚C).
- Switch: ON-OFF rocker type.
- Power light.
- Power cord: Permanent, 10 ft., 14/3 ga.
- Heater: 1470 Watts.
- Blower motor.
- Vent fan.
- Thermometer: Analog

POWER REQUIREMENTS:
- 1500 Watts, 120 Volts, 60 Hz., single phase, 12 Amps., 15 Amp. service.

SHORT FORM SPECIFICATIONS

Cres Cor Insulated Hot Cabinet Model H-137-UA-12C. Inner, outer and top liners of .063 aluminum; stainless steel internal frame. (12) sets wire universal angles for multiple pan sizes, adjustable spacing every 1-1/2". Field reversible Dutch doors, outer .063 brushed aluminum, inner 22 ga. 430 stainless steel. Fiberglass insulation in sides 2"; doors, top, base 1-1/2". Interior coved corners. Hose out cleaning capability. 1500 Watt, 120 Volt power unit. One piece base, .125 aluminum. 5" swivel modulus casters, Delrin bearings. Load capacity 250 lbs. each. 2 year parts warranty. Provide the following accessories: ____ ____ ____ . NSF, CSA-US, CSA-C, Energy Star Qualified.

CRES COR®
5925 Heisley Road • Mentor, OH 44060-1833
Phone: 877/CRESCOR • Fax: 440/350-7267
www.crescor.com

In line with its policy to continually improve its products, CRES COR reserves the right to change materials and specifications without notice.

© Crescent Metal Products, Inc. 2008 All rights reserved.

Litho in U.S.A.