Cleveland

COMBI OVEN-STEAMER

Project _____
Item _____
Quantity _____
FCSI Section _____
Approval _____
Date _____

CONVOTHERM

Featuring the
"Advanced Closed System +3"

MODEL: ☐ *OGS 10.10*

CAPACITY: *Eleven (11) - 13" by 18" by 1" half size sheet pans or Ten (10) - 12" x by 20" by 2 1/2" steam table pans*

GAS Fired – Boilerless

Cooking Modes:

- Hot Air
- Steam
- Combi
- Retherm
- "Cook & Hold"
- "Delta T" slow cooking
- "Crisp & Tasty"

Cleveland Standard Features:

- "**Advanced closed system**" with "**Crisp & Tasty**" de-moisturizing feature
- High efficiency, power burner heating system
- Fully insulated cooking compartment for maximum energy savings
- Polished cooking compartment with coved corners for easy cleaning
- Five (5) 12" x 20" wire shelves
- Hinged fan guard and hinged removable pan racks
- Two (2) speed auto reversing convection fan for even heat distribution
- Space saving, easy to operate "**Disappearing Door**"
- "**Antibacterial Hygenic Door Handle**" with embedded silver ion protection
- Door latch with safety vent position and wear-free door switch
- Vented, double glass door with integrated door stop and self draining condensate drip tray
- Easy to change, press-fit door seal
- Oven light with shock resistant safety glass
- Multipoint core temperature probe
- Digital controls for temperature, time and core probe settings
- Self diagnostic system with full text message display
- Easy to understand menu icons with bright graphics display
- User friendly selector dial
- Exclusive "**Smart Key**" for selecting option settings
- Eight (8) "**Press & Go**" one step, recipe start buttons
- Cook book library for up to 250 stored recipe programs, each recipe capable of 20 steps
- Memory module for saving unit settings and recipes
- Smooth action hand shower for compartment cleaning
- Injection system for steam

Options and Accessories

- ❒ CONVOClean hands free automatic compartment washing system
- ❒ CONVOControl software for establishing "HACCP controls" and automatic documentation of the cooking process
- ❒ Equipment stand(s) with or without Casters
- ❒ Stacking kit for mounting one (1) OGS 6.10 model on top of one (1) OGS 10.10
- ❒ Lockable cover over operating controls for prison installations

Short Form Specifications

*Shall be Cleveland Model: OGS 10.10 Combination Convection Oven / Steamer with simple to operate programmable controls for Hot Air, Convection Steam, and Combination cooking modes, "**Cook & Hold**" and "**Delta T**" slow-cooking capabilities, "**Advanced Closed System**" with "**Crisp & Tasty**" de-moisturizing feature. Multiple cooking stage programs, stored recipe library, multipoint core temperature probe, "**Press & Go**", one-step recipe start buttons, "**Smart Key**" for selecting option settings, two (2) speed auto reversing convection fan. Quiet, high efficiency power burner heating system; boilerless. "**Disappearing Door**" with "**Antibacterial Hygenic Door Handle**". Capacity for ten (10) 12" x 20" x 2 1/2" pans.*

- ❒ Ethernet connection for networking and controlling up to 100 units with a personal computer
- ❒ Propane gas option
- ❒ Trolley system for banquet operations
- ❒ Thermal cover for plate or pan rack
- ❒ CONVOClean compartment cleaning solution
- ❒ CONVOCare compartment rinse cycle solution
- ❒ "Dissolve" generator descaling solution
- ❒ Chicken Grill Rack
- ❒ CONVOGrill Grilling Rack
- ❒ 12" x 20" Wire Baskets for frying products
- ❒ Additional 12" x 20" Wire Shelves
- ❒ Water Treatment Systems
- ❒ easyToUCH™ control panel
- ❒ CONVOChicken special grease control system (not available for stacked units)

1333 East 179 St.,
Cleveland, Ohio, U.S.A. 44110
Tel: 1-216-481-4900
Fax: 1-216-481-3782
Web Site: www.ClevelandRange.com
Email: Steam@ClevelandRange.com

Manitowoc

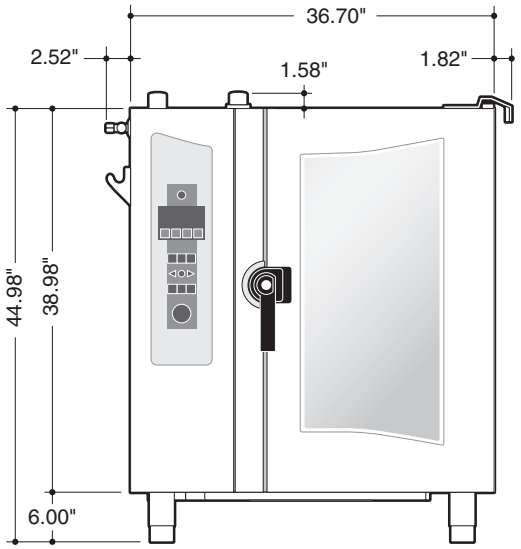

FRONT VIEW

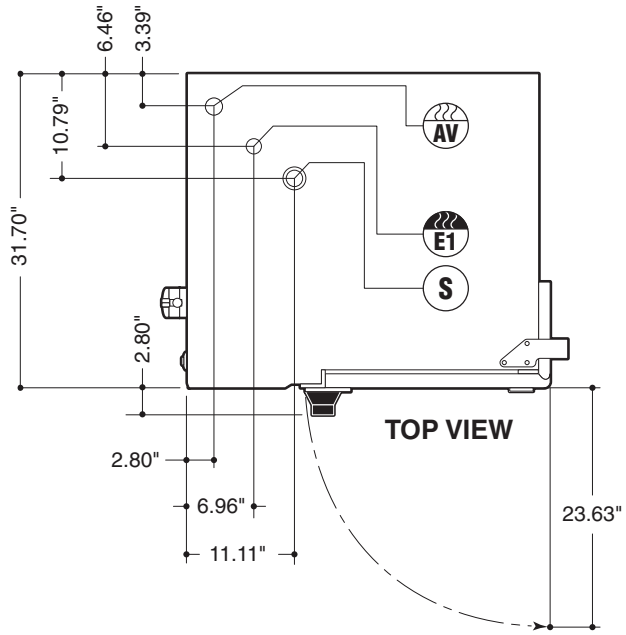

TOP VIEW

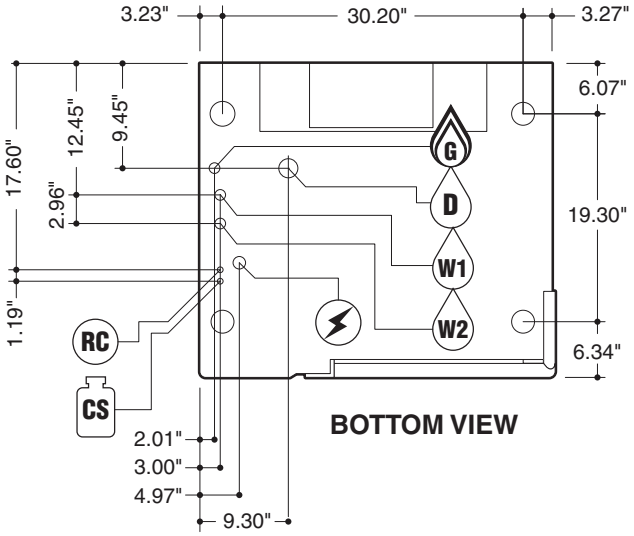

BOTTOM VIEW

Model:	OGS 10.10

Pan Capacity [Unit has 11 slide rails at 2.64" (67mm) apart]**:**

10 (12" x 20" x 2 1/2") steam table pans — **11** (12" x 20" x 1") steam table pans
11 half size wire racks (13" x 20") — **11** (13" x 18") half size sheet pans
10 (12" x 20") frying baskets - (**no wire racks needed**)

For Banquet Operations:	Optional Plate Rack holds 32 plates
Unit Dimensions:	Width - 41.04", Depth - 34.50", Height - 45.68"
Shipping Dimensions: (including packaging)	Width - 47", Depth - 41", Height - 54"
Shipping Weight:	475 Lbs

Required Clearances: Rear - 2", Left Side - 4", Right Side - 2 1/2"

- Allow for sufficient distance if a "high heat source" (i.e. Broiler) is located next to the unit.
- Allow for sufficient clearance on left side for service access (contact the factory service department for recommendations).
- Installation must comply with all local fire and health codes.

Agency Approvals:	UL - Gas, UL - Sanitation (NSF Standards)

Electrical Requirements: 120 volt, 4.9 amps, 60 Hz, single phase
Do not connect to a G.F.I. outlet

Gas Connection:	3/4" NPT
Gas Type:	Natural Gas (Propane optional)
Gas Flow Pressure:	Natural Gas - Min. 5.5" WC / Max. 14" WC Propane Gas - Min. 11" WC / Max. 14" WC
Total Connected Load:	75,700 BTU (75,700 BTU Propane)
Hot Air:	75,700 BTU (75,700 BTU Propane)

Water Connections:	Cold Water (drinking water quality)
Pressure:	35 - 80 PSI
Water Inlets:	3/4" GHT-F (Female Garden Hose Connection)

W1 Treated Water for Steam Production

W2 Untreated Water for Condenser and Hand Shower

NOTE:
The owner / operator / purchaser must ensure that the drinking/potable water quality requirements are met. Not meeting the water quality requirements will void the original equipment warranty.

Water Quality Requirements:

TDS . . . . . 50-125 ppm	pH Factor 7.0-8.5
Total Alkalinity . . 50-100 ppm	Free Chlorine . . < 0.1 ppm
Silica . . . . . < 13 ppm	Hardness . . . . . 50-100 ppm (3<6 gpg)
Chloride . . . . . < 25 ppm	Water Pressure 35-80 psi

Drain Connection: 2" I.D. No Hub Elbow Provided

Venting: Exhaust Hood required

E1 Gas Exhaust for Hot Air Heating

AV Air Vent

***Connection for Cleaning Solution**

***Connection for Rinse Cycle**

Low Pressure Safety Valve

*Available as an option

NOTES:
Cleveland Range reserves right of design improvement or modification, as warranted.
Many regional, state and local codes exist and it is the responsibility of the owner and installer to comply with the codes.
Cleveland Range equipment is built to comply with applicable standards for manufacturers.