CRMR60-W

Commercial Series Worktop Refrigerator

CRMR60-W
3/13
Item # 13304

Hoshizaki America, Inc. reserves the right to change specifications without notice.

NSF c UL US LISTED

ISO9001 · ISO14001

- Stainless steel exterior front, sides and top
- Anodized Aluminum interior sides and back with stainless steel interior floor
- Stainless steel exterior door with ABS interior liner
- Cabinet and doors are insulated with 2" of CFC free, foamed in place polyurethane
- Exclusive "stepped" door design to protect door gasket
- Spring assisted self-closing doors with stay open feature
- Extruded aluminum flush mount door handle
- Field reversible doors
- Magnetic door gasket is easily removable for cleaning
- Enamel coated evaporator coil
- Anodized aluminum shelf supports adjustable in ½" increments
- Standard with 6" stem casters (two with brakes)
- Three years parts and labor warranty
- Five year compressor warranty
- 8 ft. cord and plug

* CRMR60-W is ENERGY STAR qualified

Item #

Project:

Qty:

*AutoCad available on KCL

CRMR Dimensions W x D x H

60" x 30" x 40"*

*with 6" casters

Electrical/Refrigeration

Voltage 115/60/1

HACR Breaker
15.0

Electrical Connection (NEMA)
5-15P

Voltage Range 104-126

Ambient Temp. Range 45° -100° F

Control Setpoint Range 20° to 52° F

***Refrigerant** R-134a

Warranty

Valid in United States, Canada, Puerto Rico, and U.S. Territories. Contact factory for warranty in other countries.

- **Three Year** - Parts & Labor on entire machine.
- **Five Year** - Parts on: Compressor.

Options

- 2.25" Casters - to meet ADA
- 4" Casters
- Additional epoxy shelves

Dimensions / Capacity

Model #	Two Section CRMR60-W
Nominal Storage Capacity (CF)	17.55 ft^3
Interior Storage Capacity (CF) (AHAM)	16.6 ft^3
Overall Width x Depth	60" x 30"
Height (including 6" casters)	40"
Door Opening Width x Height	25.5" x 22.9"
Depth with Door open at 90°	57.5"
Adjustable Shelves	2
Shelf Dimensions (W x D)	27.3" x 15.9"
Crated Shipping Weight	272 lbs
Crated Height x Width x Depth	40.75" x 62" x 34"

Electrical / Refrigeration Data

Model #	Two Section CRMR60-W
Amperage	4.2
Energy Consumption (kwh/day) **ENERGY STAR**	2.15
Heat Rejection (BTU/Hr.) @NSF	414
Approx. Nominal Compres. BTU/HR(HP)	1386(1/5HP)

© HOSHIZAKI AMERICA, INC.

618 Hwy. 74 S., Peachtree City, GA 30269
TEL 800-438-6087
FAX 800-345-1325
www.hoshizaki.com

CRMR60-W

Commercial Series Worktop Refrigerator

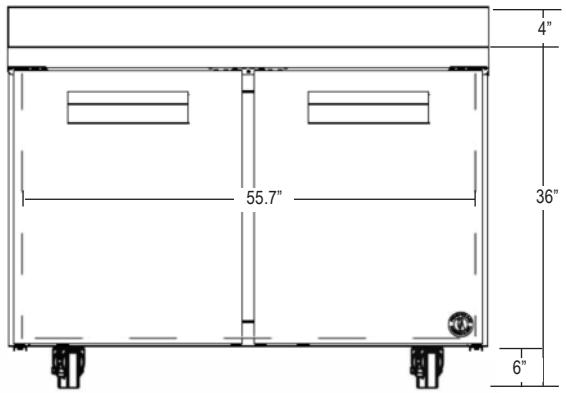

CRMR60-W
FRONT

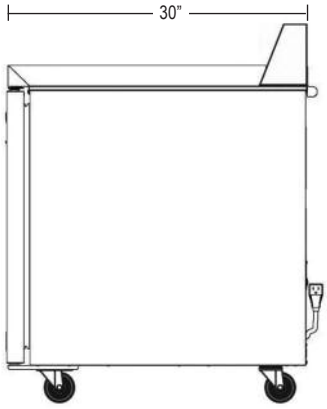

CRMR60-W
SIDE

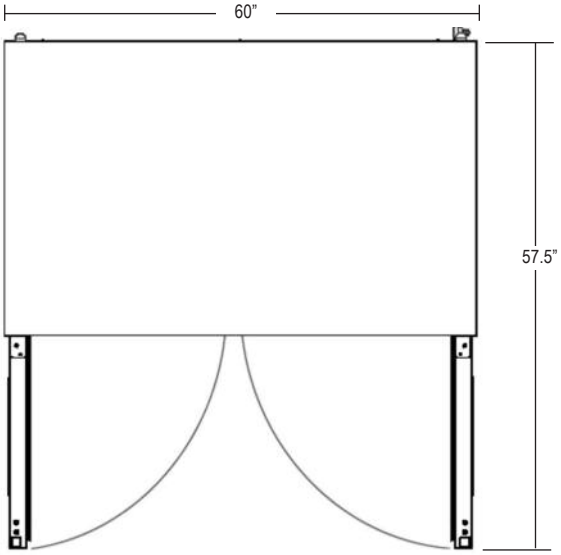

CRMR60-W
PLAN VIEW

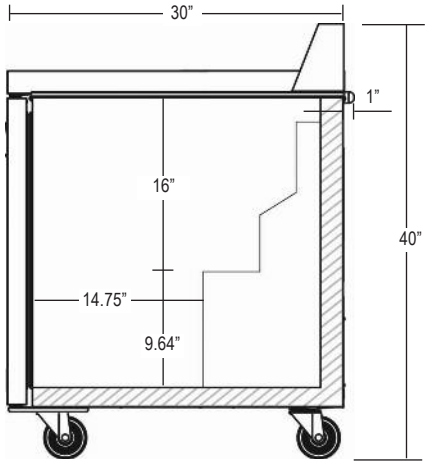

SIDE
(Cross Section)

Cabinet Construction

The exterior cabinet top, front, and sides, are constructed of high quality stainless steel. The exterior back and bottom are constructed of coated steel. The cabinet interior back and sides are anodized aluminum with an ABS ceiling and stainless steel floor. One heavy duty epoxy coated shelf per section is standard. Mounted on anodized aluminum pilasters the shelves are adjustable in ½" increments. Cabinet walls and doors are insulated with 2" of environmentally friendly, CFC free, foamed in place polyurethane. 6" polyolefin, stem casters (two with brakes) are standard.

Door Construction

Doors are constructed of high grade stainless steel exterior with an ABS interior liner. Hoshizaki's exclusive "stepped" design protects the gasket while product is removed from the cabinet. Doors are provided with a one piece, extruded aluminum, flush mount handle. Spring assisted self-closing doors are equipped with a stay open feature past 90 degrees. Snap-in magnetic door gaskets are durable and easily removed for cleaning. Field reversible door hinging is standard.

Refrigeration System

The high efficiency refrigeration system is self-contained with an enamel coated evaporator for extended life. Condensate removal is accomplished with an energy efficient non-electric evaporation system. A capillary tube controls the flow of environmentally friendly R-134A refrigerant through the evaporator. Refrigeration system utilizes an "off cycle" defrost to eliminate any ice on the evaporator coil. 115 volt units are equipped with an eight foot cord and plug (20.0 amps or less).

© HOSHIZAKI AMERICA, INC.

618 Hwy. 74 S., Peachtree City, GA 30269 • TEL 800-438-6087 • FAX 800-345-1325 • www.hoshizaki.com