BLODGETT COMBI®

# CNVX-14E

Single or Double
Electric Convection Oven

Project _____

Item No. _____

Quantity _____

CNVX-14E

All data is shown per oven section, unless otherwise indicated.
*Refer to operator manual specification chart for listed model names.*

*Shown stacked under Blodgett BCX-14E Combination Oven-Steamer*

## EXTERIOR CONSTRUCTION

- Stainless steel top, front and sides
- Dual pane tempered viewing window with hinged inner glass for easy cleaning
- Door mounted condensate trough
- Top and bottom mount, easily adjustable door hinges
- Pivot out user interface panel for service access

## INTERIOR CONSTRUCTION

- Fully welded stainless steel frame
- Fully insulated cooking chamber
- Fixed drain bottom center of cavity
- Easily removable stainless steel side rails
- Coved corner liner for ease of cleaning

## OPERATION

- Standard control with thermostat range of 140F to 500F
- Multiple speed reversing fan for even bake
- Dual stage door latch
- Integral door switch

## CAPACITY

- Fourteen 12" x 20" x 2-1/2" deep pans at 3-1/4" spacing
- Seven 18" x 26" deep pans at 3-1/4" spacing

## STANDARD FEATURES

- Five (5) stainless steel wire shelves per section (capacity for 7)
- Hinged pressure panel for cleanability
- Four halogen lights for superior cavity illumination
- Retractable hose reel hidden behind door, no extraneous hoses
- Stacking kit and casters for double stack ovens
- Pressure spray bottle for oven cleaning
- 6-1/2" core temperature probe
- Start-up inspection service by factory authorized service agent
- One year parts and labor oven warranty*

* *For all international markets, contact your local distributor.*

## OPTIONS AND ACCESSORIES

(AT ADDITIONAL CHARGE)

- **Legs**
  - ❑ 4" (101.6mm) adjustable legs
  - ❑ 6" (152.4mm) adjustable legs
  - ❑ 6" (152.4mm) seismic legs
  - ❑ 25" (635mm) adjustable legs
- **Voltage options**
  - ❑ 480VAC, 3 phase
  - ❑ 415/240VAC, 3 phase
- ❑ Additional 6-1/2" core temperature probe
- ❑ Floor stand with rack supports
- ❑ Stand mount casters
- ❑ Additional stainless steel wire shelves
- ❑ Chicken roasting rack
- ❑ Extended warranty

**BLODGETT COMBI**
www.blodgett.com
44 Lakeside Avenue, Burlington, VT 05401 Toll Free: (800) 331-5842 • Phone: (802) 860-3700 • Fax: (802) 864-0183

BLODGETT COMBI

# CNVX-14E

APPROVAL/STAMP

DIMENSIONS ARE IN INCHES (MM)

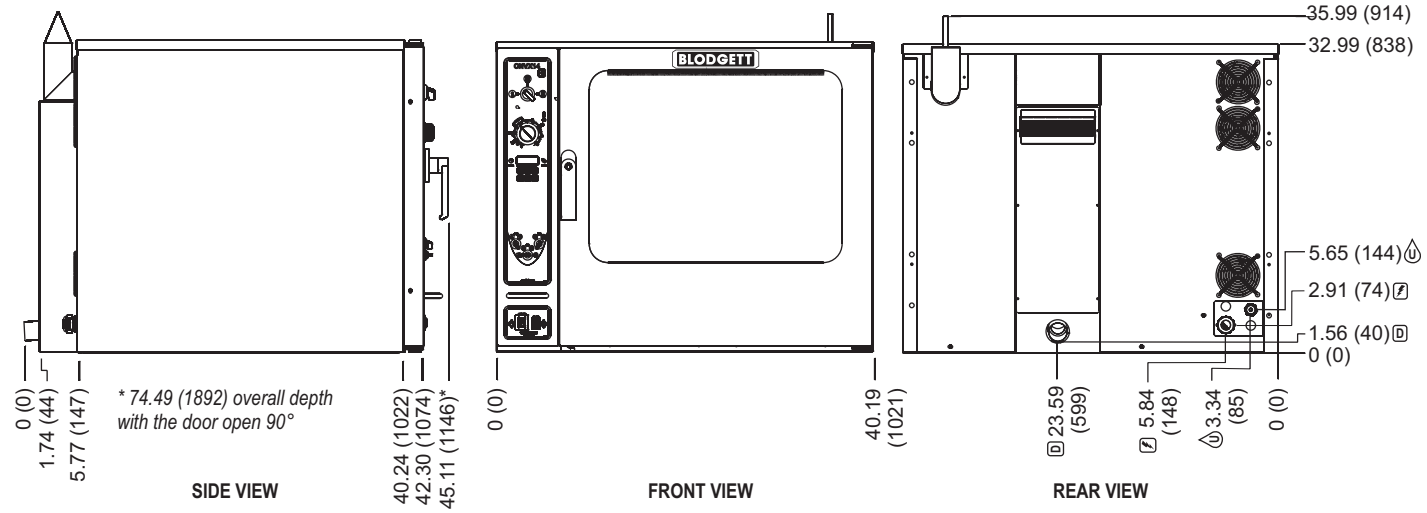


**SHORT FORM SPECIFICATIONS**: Provide Blodgett Combi model CNVX-14E single, electric convection oven. Unit shall have the ability to cook with hot air at an operating range 140F to 500F, and low temperature cooking and holding. Oven capacity to accept 7ea 18x26 bake pans or 14ea 12x20x2.5" full size steam table pans with 3-1/4" spacing. Front access service user interface control panel and service diagnosis system. Unit shall be constructed with a fully welded stainless steel frame. Cooking chamber shall be constructed with 304 series with bright-annealed stainless steel finish and coved corners. Integrated retractable wash down hose to include front water shut off valve. Unit shall include a four speed, bi-directional fan. Dual pane thermal glass window with 180 degree door swing, two-step safety door-latch with adjustable door hinges, door mounted drip pan. Unit to include a detachable 6-1/2" core temperature probe and four halogen lights. Where applicable, quantities in this spec are doubled for stacked units. Unit can also stack with Blodgett model BCX-14E or BX-14E combination oven-steamers. A start-up inspection service will be performed by our factory-authorized agent at no cost to the operator. One-year parts and labor warranty, standard.

## DIMENSIONS:

**Floor space:** 42.30" x 40.19" (1074 x 1021mm)

**Unit Height:**

| | |
|---|---|
| Single | 35.99" (914mm) |
| Double | 68.98" (1752mm) |

**Additional Height:**

| | |
|---|---|
| 4" adjustable legs | 4.88" - 6" (123.8-152.4mm) |
| 6" adjustable legs | 6.88" - 8" (174.6-203.2mm) |
| 6" adjustable seismic legs | 6.63" - 8" (168.3-203.2mm) |
| 25" adjustable legs | 25.25" - 26.38" (641.4-670mm) |
| Low profile caster | 4" (101.6mm) |
| Stand w/rack supports | 22.5" - 23.63" (571.5-600.1mm) |
| Stand w/rack supports on casters | 22.63" (574.7mm) |

## OVEN CLEARANCES:

| | |
|---|---|
| Right Side | 0" (0mm) |
| Rear | 6" (152.4mm) |
| Left Side | 0" (0mm) |

## MINIMUM ENTRY CLEARANCE:

| | |
|---|---|
| Uncrated | 33" (838mm) |
| Crated | 42" (1066.8mm) |

## POWER SUPPLY (per section):

| | | |
|---|---|---|
| 208VAC | 19.0 kW | 3 phase (53 amp) |
| 240VAC | 19.0 kW | 3 phase (46 amp) |
| 480VAC | 19.0 kW | 3 phase (23 amp) |
| 415VAC | 19.0 kW | 3 phase (26.5 amp) 5 wire |

## SHIPPING INFORMATION:

**Approx. Weight:**

| | |
|---|---|
| Single section | 595 lbs. (270 kg) |
| Double stack* | 1220 lbs. (553 kg) |
| Stand w/guides | 140 lbs. (64 kg) |

**Use single section weight when stacking with BCX-14E or BX-14E*

**Crate size (per section):**

44.5" H x 42" W x 54.5" D (1130 x 1067 x 1384mm)

***NOTE:*** *The company reserves the right to make substitutions of components without prior notice*


**BLODGETT COMBI**

www.blodgett.com

44 Lakeside Avenue, Burlington, VT 05401 • Toll Free: (800) 331-5842 • Phone: (802) 860-3700 • Fax: (802) 864-0183



Printed in U.S.A.


**NOTE:** FOR COMMERCIAL USE ONLY


P/N 50338 Rev B (4/08)