iMIX-5S+ Iced Cappuccino

32.8" x 24.0" x 19.3"
(83.3cm x 61.0cm x 49.0cm)

Servers and airpots sold separately

- 7gal (26.5L) hot water tank to meet peak serving times
- Alphanumeric display allows adjustments and service operational testing from front of machine. Also communicates advertising messages, machine status and technical support contact information
- Can be set as push and hold or single size portion control
- Capacity: Five 8lb (3.6kg) hoppers
- Cup clearance at 7.25” (18.4cm) to accommodate popular cup sizes [adjustable to 8.12” (20.6cm)]
- Easily removable side panels for complete access to service components
- Front of machine access to tank drain, dump valves, auger and whipper motors and control board for easy service set up and calibration
- High speed heavy-duty whipper for complete product mixing
- High efficiency LED lighted front graphics for merchandising
- Spring-loaded, all metal auger drive system for easy hopper installation
- Variable speed motors allow control of product consistency in mixing chamber (.75 to 6.6 grams of powder per second)

Agency:

NSF Intertek

Specifications

Product #: 38100.0010
Water Access: Plumbed
Finish: Black
Hoppers: Five
Door: Lit
Door: Side Hinge
Refrigerant: NONE
Ice Bank: 0.00 lbs (0.000 kgs)
Dispense: Portion Control
Dispense: Push Button

Additional Features

Electrical & Capacity

Volts	Amps	Watts	Cord Attached	Plug Type	8oz cups/hr 236ml cups/hr	Input H²O Temp.	Phase	# Wires plus Ground	Hertz
120	15	1800	Yes	NEMA 5-15P	72	60°F (15.5°C)	1	2	50/60

Plumbing Requirements

PSI	kPa	Fitting Supplied	Water Flow Required (GPM)
20-100	138-689	1/4" Male Flare Fitting	-

CAD Drawings

2D	Revit	KLC
●		

BUNN® reserves the right to change specifications and product design without notice. Such revisions do not entitle the buyer to corresponding changes, improvements, additions or replacements for previously purchased equipment.
For most current specifications and other info visit bunn.com.

Created on: 06/15/2017

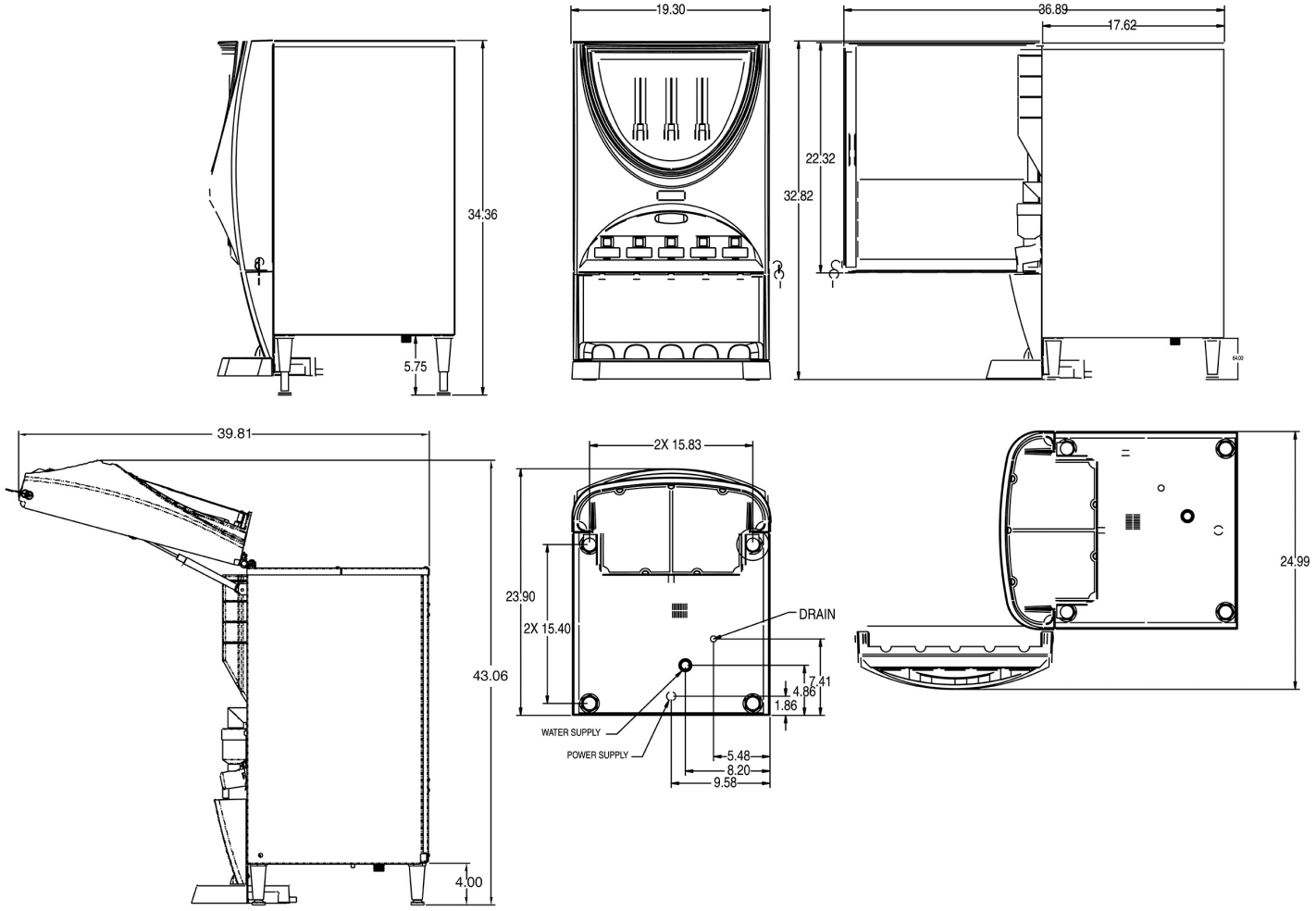

	Unit			Shipping				
	Width	**Height**	**Depth**	**Width**	**Height**	**Depth**	**Weight**	**Volume**
English	19.3 in.	32.8 in.	24.0 in.	-	-	-	130.570 lbs	-
Metric	49.0 cm	83.3 cm	61.0 cm	-	-	-	59.227 kgs	-

BUNN® reserves the right to change specifications and product design without notice. Such revisions do not entitle the buyer to corresponding changes, improvements, additions or replacements for previously purchased equipment. For most current specifications and other info visit bunn.com.

Created on: 06/15/2017

Related Products & Accessories: iMIX-5S+ Iced Cappuccino(38100.0010)

DISPLAY, GRAPHICS (iMIX-4/5)

Product #: 36768.0000

DISPLAY,GRAPHICS ICED CAP

Product #: 36768.0005

WATER FILTER, EQHP-10L

Product #: 39000.0001

WATER FILTER, EQHP-10

Product #: 39000.0004

BUNN® reserves the right to change specifications and product design without notice. Such revisions do not entitle the buyer to corresponding changes, improvements, additions or replacements for previously purchased equipment. For most current specifications and other info visit bunn.com.

Serving & Holding Options: iMIX-5S+ Iced Cappuccino(38100.0010)

Serving and Holding selections are currently unavailable. Please contact your sales representative to find out more information.

BUNN® reserves the right to change specifications and product design without notice. Such revisions do not entitle the buyer to corresponding changes, improvements, additions or replacements for previously purchased equipment. For most current specifications and other info visit bunn.com.