TCD-1 w/1 Nozzle & Solid Lid

22.3" x 18.2" x 12.8"
(56.6cm x 46.2cm x 32.5cm)

- Accommodates one, 1gal (3.8L) jug in top of container, or bag-in-box
- Built-in pressure regulator provides consistent product to water ratio
- Mixes a range of 5:1 to 15:1 concentrate to water ratio
- Rear shut-off valve for cleaning dispenser
- Side off-set handles for side-by-side placement
- Solid plastic lid
- Venturi valve creates siphon pulling product through to mixing valve

Agency:

NSF

Specifications

Product #: 37750.0000

Water Access: Plumbed

Finish: Stainless

Handle: Side Carry Handles

Lid Color: Solid Stainless Lid

Additional Features

Standard Dispense Faucet

Holding Capacity

English	Metric
-	-

BUNN® reserves the right to change specifications and product design without notice. Such revisions do not entitle the buyer to corresponding changes, improvements, additions or replacements for previously purchased equipment. For most current specifications and other info visit bunn.com.

Created on: 06/15/2017

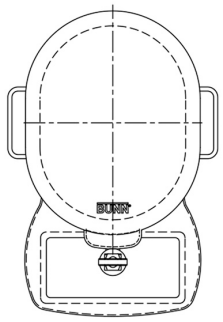

TCD-1

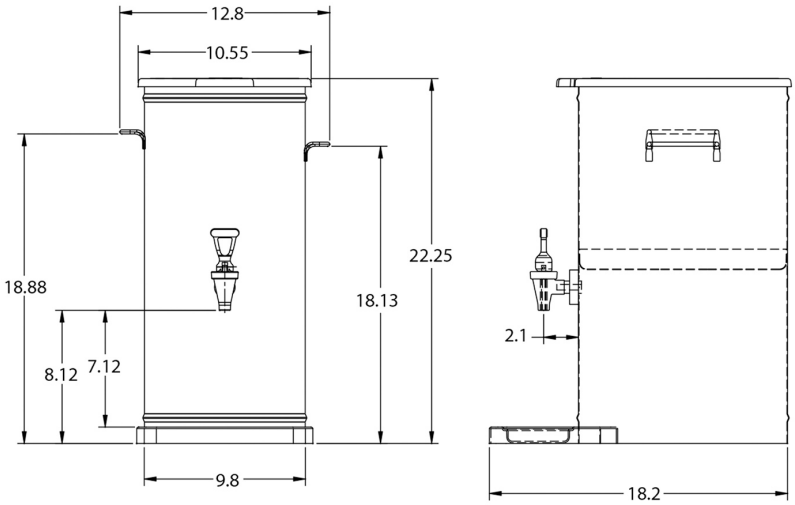

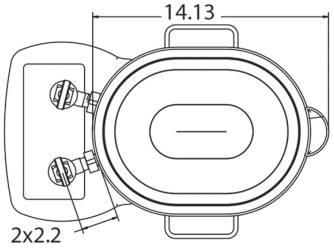

TCD-2

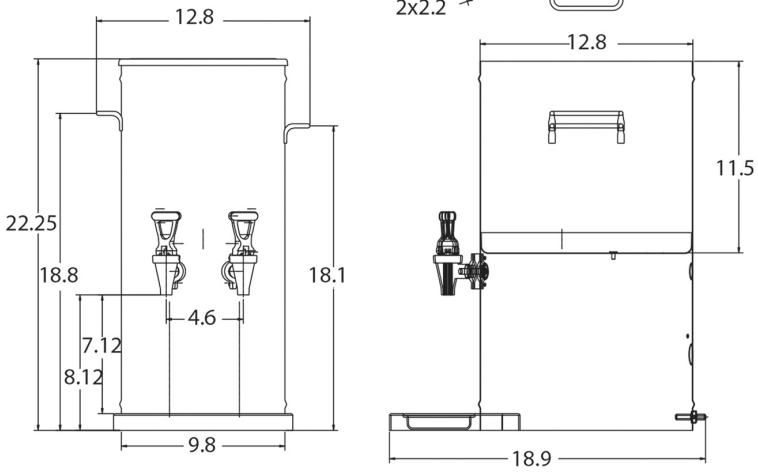

Unit				Shipping				
	Width	**Height**	**Depth**	**Width**	**Height**	**Depth**	**Weight**	**Volume**
English	12.8 in.	22.3 in.	18.2 in.	-	-	-	17.100 lbs	3.958 ft³
Metric	32.5 cm	56.6 cm	46.2 cm	-	-	-	7.757 kgs	0.112 m³

BUNN® reserves the right to change specifications and product design without notice. Such revisions do not entitle the buyer to corresponding changes, improvements, additions or replacements for previously purchased equipment. For most current specifications and other info visit bunn.com.

Created on: 06/15/2017

Related Products & Accessories: TCD-1 w/1 Nozzle & Solid Lid(37750.0000)

DRIP TRAY, TDO/TCD

Product #: 03207.0004

WIRE GRILL,DRIP TRAY (SINGLE)

Product #: 26801.0000

DRIP TRAY KIT, TCD/ TDO

Product #: 38029.1000

BUNN® reserves the right to change specifications and product design without notice. Such revisions do not entitle the buyer to corresponding changes, improvements, additions or replacements for previously purchased equipment. For most current specifications and other info visit bunn.com.

Model Compatibility: TCD-1 w/1 Nozzle & Solid Lid(37750.0000)

Compatibility selections are currently unavailable. Please contact your sales representative to find out more information.

BUNN® reserves the right to change specifications and product design without notice. Such revisions do not entitle the buyer to corresponding changes, improvements, additions or replacements for previously purchased equipment. For most current specifications and other info visit bunn.com.

Created on: 06/15/2017