LCA-2 (w/Scholle 1910 3/16")

31.3" x 24.8" x 12.2"
(79.5cm x 63.0cm x 31.0cm)

Servers and airpots sold separately

- Accommodates 1⁄2gal (1.9L) and most 1gal (3.8L) bag-in-box (BIB) containers
- Attractive appearance and narrow 12" (30.5 cm) width
- FlavorGard® technology continuously monitors extract-to-water ratio and assures flavor consistency
- Refill or rinse LED lights alert the operator for concentrate or cleaning
- Ventilated Cabinet
- Insulated product cabinet assures maximum product life

Agency:

UL LISTED NSF

Specifications

Product #: 34400.0002
Product Ratio: 25:1-45:1
Connector: Scholle 1910LX
Water Access: Plumbed
Finish: Black
Dispense: Push Button
Legs: 4" Black Legs

Additional Features

Alt Disp Rate 2.5 oz/s(74ml/s)
Alt Product Ratio 25:1-65:1

Electrical & Capacity

Volts	Amps	Watts	Cord Attached	Plug Type	8oz cups/hr 236ml cups/hr	Input H²O Temp.	Phase	# Wires plus Ground	Hertz
120	13.2	1575	Yes	NEMA 5-15P	810	60°F (15.5°C)	1	2	60
120/208	21	4331	-	N/A	1760	60°F (15.5°C)	1	-	-
120/240	24	5700	-	N/A	2344	60°F (15.5°C)	1	-	-

Plumbing Requirements

PSI	kPa	Fitting Supplied	Water Flow Required (GPM)
20-90	138-621	3/8" Male Flare Fitting	-

CAD Drawings

2D	Revit	KLC
●		

BUNN® reserves the right to change specifications and product design without notice. Such revisions do not entitle the buyer to corresponding changes, improvements, additions or replacements for previously purchased equipment.
For most current specifications and other info visit bunn.com.

Created on:
06/15/2017

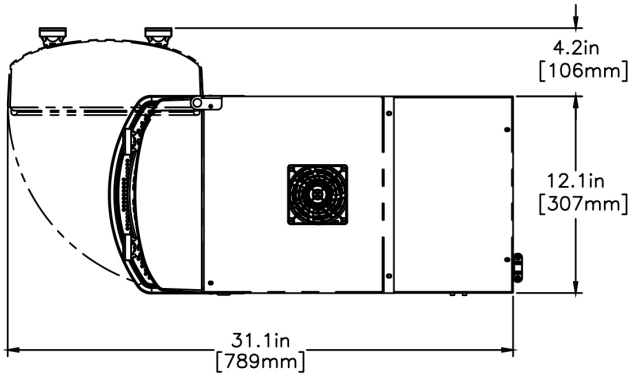

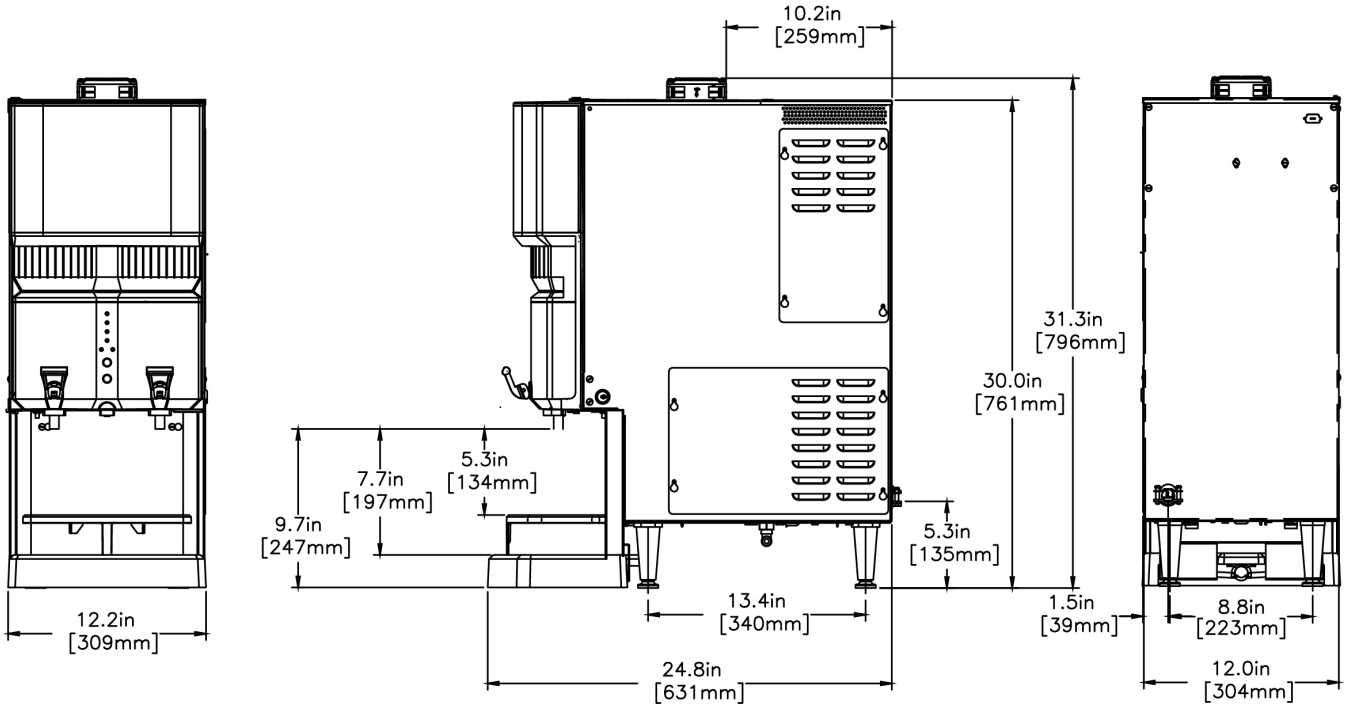

	Unit			Shipping				
	Width	**Height**	**Depth**	**Width**	**Height**	**Depth**	**Weight**	**Volume**
English	12.2 in.	31.3 in.	24.8 in.	-	-	-	89.460 lbs	-
Metric	31.0 cm	79.5 cm	63.0 cm	-	-	-	40.579 kgs	-

BUNN® reserves the right to change specifications and product design without notice. Such revisions do not entitle the buyer to corresponding changes, improvements, additions or replacements for previously purchased equipment. For most current specifications and other info visit bunn.com.

Created on: 06/15/2017

Related Products & Accessories: LCA-2 (w/Scholle 1910 3/16")(34400.0002)

ADPTR/TUBE PKG, SCHOLLE 3/16"

Product #: 34400.0201

TUBE KIT, .188 PUMP LCC/LCA

Product #: 34727.1000

TUBE KIT,.125 PUMP LCC/LCA

Product #: 34728.1000

KIT,DISPENSE RATIO CAL LCA/LCC

Product #: 34843.1000

WATER FILTER, EQHP-10L

Product #: 39000.0001

WATER FILTER, EQHP-25L

Product #: 39000.0002

WATER FILTER, EQHP-10

Product #: 39000.0004

WATER FILTER, EQHP-25

Product #: 39000.0005

BUNN® reserves the right to change specifications and product design without notice. Such revisions do not entitle the buyer to corresponding changes, improvements, additions or replacements for previously purchased equipment. For most current specifications and other info visit bunn.com.

Created on: 06/15/2017

Serving & Holding Options: LCA-2 (w/Scholle 1910 3/16")(34400.0002)

Serving and Holding selections are currently unavailable. Please contact your sales representative to find out more information.

BUNN® reserves the right to change specifications and product design without notice. Such revisions do not entitle the buyer to corresponding changes, improvements, additions or replacements for previously purchased equipment. For most current specifications and other info visit bunn.com.