TRUE FOOD SERVICE EQUIPMENT, INC.
2001 East Terra Lane • P.O. Box 970 • O'Fallon, Missouri 63366
(636)240-2400 • Fax (636)272-2408 • (800)325-6152 • Intl Fax# (001)636-272-7546
Parts Dept. (800)424-TRUE • Parts Dept. Fax# (636)272-9471 • www.truemfg.com

Project Name: _____
Location: _____
Item #: _____ *Qty:* _____
Model #: _____

AIA #
SIS #

Model:
TUC-60F-LP

Undercounter:
Low Profile Solid Door Freezer

TUC-60F-LP

- True's undercounter's are designed with enduring quality and value that protects your long term investment. Our commitment to using the highest quality materials and oversized refrigeration ensures exceptional food preservation.
- "Low Profile" models are designed to slide easily under custom built countertops.
- 1½" (39 mm) diameter dual swivel castors. 31⅞" (810 mm) work surface height.
- Oversized, factory balanced, refrigeration system holds -10°F (-23.3°C). Ideal for frozen food and ice cream.
- Exterior - 300 series stainless steel top, stainless front and sides with matching aluminum back.
- Interior - attractive, NSF approved, white aluminum liner with 300 series stainless steel floor.
- Self closing doors. Positive seal, torsion type closure system.
- Foamed-in-place using Ecomate. A new, innovative, high density, polyurethane insulation that has zero ozone depletion potential (ODP) and zero global warming potential (GWP).

1½" diameter dual swivel castors for "LP" models.

ROUGH-IN DATA

Specifications subject to change without notice.
Chart dimensions rounded up to the nearest ⅛" (millimeters rounded up to next whole number).

Model	Doors	Capacity (Cu. Ft.) (liters)	Shelves	Cabinet Dimensions (inches) (mm) L	D†	H*	Counter Height	HP	Voltage	Amps	NEMA Config.	Cord Length (total ft.) (total m)	Crated Weight (lbs.) (kg)
TUC-60F-LP	2	15.5 439	4	60⅜ 1534	30⅛ 766	29¾ 756	31⅞	½ ½	115/60/1 230-240/50/1	11.6 6.2	5-15P ▲	7 2.13	N/A N/A

† Depth does not include 1" (26 mm) for rear bumpers.
* Height does not include 2⅛" (54 mm) for castors.

▲Plug type varies by country.

MADE IN USA SINCE 1945 · 5 YEAR COMPRESSOR WARRANTY USA · c UL us · NSF · CE

Printed in U.S.A.

APPROVALS:

AVAILABLE AT:

Model:
TUC-60F-LP

Undercounter:
Low Profile Solid Door Freezer

STANDARD FEATURES

DESIGN
- True's commitment to using the highest quality materials and oversized refrigeration systems provides the user with colder product temperatures, lower utility costs, exceptional food safety and the best value in today's food service marketplace.
- "Low Profile" models are designed to slide easily under custom built countertops.

REFRIGERATION SYSTEM
- Factory engineered self-contained, capillary tube system using environmentally friendly (CFC free) R404A refrigerant.
- Oversized, factory balanced, refrigeration system with guided airflow to provide uniform product temperatures.
- Extra large evaporator coil balanced with higher horsepower compressor and large condenser; maintains -10°F (-23.3°C). Ideal for frozen foods and ice cream.
- Sealed, cast iron, self-lubricating evaporator fan motor(s) and larger fan blades give True merchandisers a more efficient low velocity, high volume airflow design. This unique design ensures colder standard temperatures and faster recovery in high use situations.
- Condensing unit access located in back, slides out for easy maintenance.
- Automatic defrost system time-initiated, time-terminated.
- Electric heated condensate pan.

CABINET CONSTRUCTION
- Exterior - 300 series stainless steel top, front and sides with matching aluminum back.
- Interior - attractive, NSF approved, white aluminum liner. 300 series stainless steel floor with coved corners.
- Insulation - entire cabinet structure and solid doors are foamed-in-place using Ecomate. A new, innovative, high density, polyurethane insulation that has zero ozone depletion potential (ODP) and zero global warming potential (GWP).
- 1½" (39 mm) diameter dual swivel castors permits easy placement. 31⅞" (810 mm) work surface height.

DOORS
- Stainless steel exterior with white aluminum liner to match cabinet interior.
- Each door fitted with 12" (305 mm) long recessed handle that is foamed-in-place with a sheet metal interlock to ensure permanent attachment.
- Positive seal self-closing doors with 90° stay open feature. Doors swing within cabinet dimensions.
- Magnetic door gaskets of one piece construction, removable without tools for ease of cleaning.

SHELVING
- Shelf support pilasters made of same material as cabinet interior; shelves are adjustable on½" (13 mm) increments.

MODEL FEATURES
- Evaporator is epoxy coated to eliminate the potential of corrosion.
- NSF-7 compliant for open food product.

ELECTRICAL
- Unit completely pre-wired at factory and ready for final connection to a 115/60/1 phase, 15 amp dedicated outlet. Cord and plug set included.

115/60/1
NEMA-5-15R

OPTIONAL FEATURES/ACCESSORIES
Upcharge and lead times may apply.
- ❑ 230 - 240V / 50 Hz.
- ❑ Basic overshelf.
- ❑ Sandwich/salad service shelf.
- ❑ Single utility shelf.
- ❑ Double utility shelf.
- ❑ Additional shelves.
- ❑ 30" (762 mm) deep,½" thick, white polyethylene cutting board. Requires "L" brackets.
- ❑ 30" (762 mm) deep,½" thick, composite cutting board. Requires "L" brackets.
- ❑ Heavy duty 16 gauge tops.
- ❑ Exterior rectangular digital thermometer (factory installed).
- ❑ Standard height units with 5" (127 mm) diameter castors. 36" (915 mm)work surface height.
- ❑ ADA compliant models with 34" (864 mm) work surface height.

PLAN VIEW

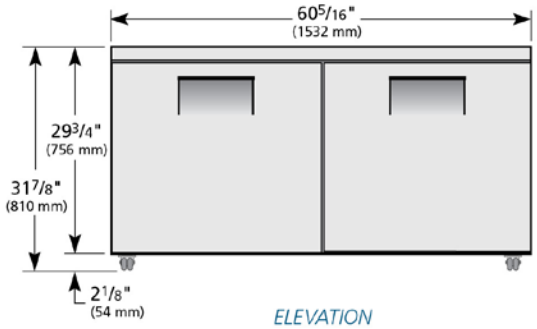

ELEVATION

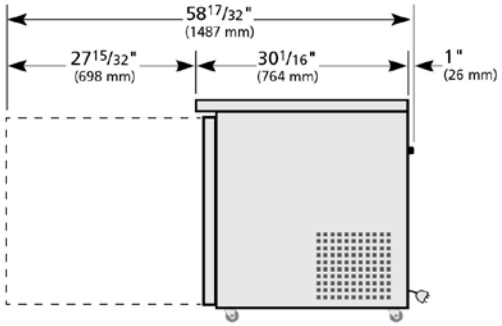

RIGHT VIEW

WARRANTY
One year warranty on all parts and labor and an additional 4 year warranty on compressor. (U.S.A. only)

METRIC DIMENSIONS ROUNDED UP TO THE NEAREST WHOLE MILLIMETER

SPECIFICATIONS SUBJECT TO CHANGE WITHOUT NOTICE

Model	Elevation	Right	Plan	3D	Back
TUC-60F-LP	TFQY103E	TFQY103S	TFQY03P	TFQY1033	

TRUE FOOD SERVICE EQUIPMENT
2001 East Terra Lane • P.O. Box 970 • O'Fallon, Missouri 63366 • (636)240-2400 • Fax (636)272-2408 • (800)325-6152 • Intl. Fax# (001)636-272-7546 • www.truemfg.com