TRUE FOOD SERVICE EQUIPMENT, INC.
2001 East Terra Lane • P.O. Box 970 • O'Fallon, Missouri 63366
(636)240-2400 • Fax (636)272-2408 • (800)325-6152 • Intl Fax# (001)636-272-7546
Parts Dept. (800)424-TRUE • Parts Dept. Fax# (636)272-9471 • www.truemfg.com

Project Name: _____
Location: _____
Item #: _____ *Qty:* _____
Model #: _____

AIA #
SIS #

Model:
TS-72F

TS Series:
Reach-In Solid Swing Door 300 Series Stainless Steel Freezer

TS-72F

- True's TS series is the choice for the exclusive 300 series stainless steel commercial application.
- Designed using the highest quality materials and components to provide the user with colder product temperatures, lower utility costs, exceptional food safety and the best value in today's food service marketplace.
- Extra large evaporator coil balanced with higher horsepower compressor and large condenser; maintains -10°F (-23.3°C) cabinet temperatures. Ideally suited for both frozen foods and ice cream.
- 300 series stainless steel interior and exterior front, sides and door(s). The very finest stainless with higher tensile strength for fewer dents and scratches. Matching aluminum back.
- Adjustable, heavy duty PVC coated shelves.
- Positive seal self-closing door(s). Lifetime guaranteed door hinges and torsion type closure system.
- Automatic defrost system time-initiated, temperature-terminated. Saves energy consumption and provides shortest possible defrost cycle.

Bottom mounted units feature:

- "No stoop" lower shelf.
- Storage on top of cabinet.
- Compressor performs in coolest, most grease free area of kitchen.
- Easily accessible condenser coil for cleaning.

ROUGH-IN DATA

Specifications subject to change without notice.
Chart dimensions rounded up to the nearest ⅛" (millimeters rounded up to next whole number).

Model	Doors	Capacity (Cu. Ft.) (liters)	Shelves	Cabinet Dimensions (inches) (mm) L	D	H*	HP	Voltage	Amps	NEMA Config.	Cord Length (total ft.) (total m)	Crated Weight (lbs.) (kg)
TS-72F	3	72 2039	9	78⅛ 1985	29½ 750	79⅛ 2010	1 1½	115/208-230/60 230-240/50/1	8.8 9.0	14-20P ▲	9 2.74	710 323

* Height does not include 5" (127 mm) for castors or 6" (153 mm) for optional legs.

▲Plug type varies by country.

Printed in U.S.A.

APPROVALS:

AVAILABLE AT:

Model:

TS-72F

TS Series:

Reach-In Solid Swing Door 300 Series Stainless Steel Freezer

STANDARD FEATURES

DESIGN
- True's solid door reach-in's are designed with enduring quality that protects your long term investment.
- True's commitment to using the highest quality materials and oversized refrigeration systems provides the user with colder product temperatures, lower utility costs, exceptional food safety and the best value in today's food service marketplace.

REFRIGERATION SYSTEM
- Factory engineered, self-contained, capillary tube system using environmentally friendly (CFC free) R404A refrigerant.
- Extra large evaporator coil balanced with higher horsepower compressor and large condenser; maintains -10°F (-23.3°C). Ideal for both frozen foods and ice cream.
- Sealed, cast iron, self-lubricating evaporator fan motor(s) and larger fan blades give True reach-in's a more efficient, low velocity, high volume airflow design. This unique design ensures faster temperature recovery and shorter run times in the busiest of food service environments.
- Bottom mounted condensing unit positioned for easy maintenance. Compressor runs in coolest and most grease free area of the kitchen. Allows for storage area on top of unit.
- Automatic defrost system time-initiated, temperature-terminated. Saves energy consumption and provides shortest possible defrost cycle.

CABINET CONSTRUCTION
- Exterior - 300 series stainless steel door(s), front and sides. Matching aluminum back.
- Interior - 300 series stainless steel liner and floor.
- Insulation - entire cabinet structure and solid doors are foamed-in-place using Ecomate. A new, innovative, high density, polyurethane insulation that has zero ozone depletion potential (ODP) and zero global warming potential (GWP).
- Welded, heavy duty steel frame rail, black powder coated for corrosion protection.
- Frame rail fitted with 4" (102 mm) diameter stem castors - locks provided on front set.

DOORS
- 300 series stainless steel exterior and liner(s). Door(s) extend full width of cabinet shell. Door lock(s) standard.
- Lifetime guaranteed recessed door handles. Each door fitted with 12" (305 mm) long recessed handle that is foamed-in-place with a sheet metal interlock to ensure permanent attachment.
- Positive seal self-closing doors. Lifetime guaranteed door hinges and torsion type closure system.
- Magnetic door gasket(s) of one piece construction, removable without tools for ease of cleaning.

SHELVING
- Nine (9) adjustable, heavy duty PVC coated wire shelves 24⅛"L x 22⅜"D (613 mm x 591 mm). Four (4) chrome plated shelf clips included per shelf.
- Aluminum shelf support pilasters. Shelves are adjustable on½" (13 mm) increments.

LIGHTING
- Incandescent interior lighting -safety shielded. Lights activated by rocker switch mounted above door(s).

MODEL FEATURES
- Evaporator is epoxy coated to eliminate the potential of corrosion.
- Exterior solar, digital temperature display.
- Rear airflow guards prevent product from blocking optimal airflow.
- NSF-7 compliant for open food product.

ELECTRICAL
- Unit completely pre-wired at factory and ready for final connection to a 115/208-230/60Hz, single phase, 3 pole, 4 wire, 20 amp dedicated outlet. Cord and plug set included.

115/208-230/1
NEMA-14-20R

OPTIONAL FEATURES/ACCESSORIES

Upcharge and lead times may apply.
- ❑ 230 - 240V / 50 Hz.
- ❑ 6" (153 mm) standard legs.
- ❑ 6" (153 mm) seismic/flanged legs.
- ❑ Alternate door hinging (factory installed).
- ❑ Novelty baskets.
- ❑ Additional shelves.
- ❑ Half door bun tray racks. Each holds up to eleven 18"L x 26"D (458 mm x 661 mm) sheet pans (sold separately) (airflow guards need to be removed).
- ❑ Full door bun tray racks. Each holds up to twenty-two 18"L x 26"D (458 mm x 661 mm) sheet pans (sold separately) (airflow guards need to be removed).
- ❑ Remote cabinets (condensing unit supplied by others; system comes standard with 404A expansion valve and requires R404A refrigerant). Consult factory technical service department for BTU information. All remote units must be hard wired during installation.

PLAN VIEW

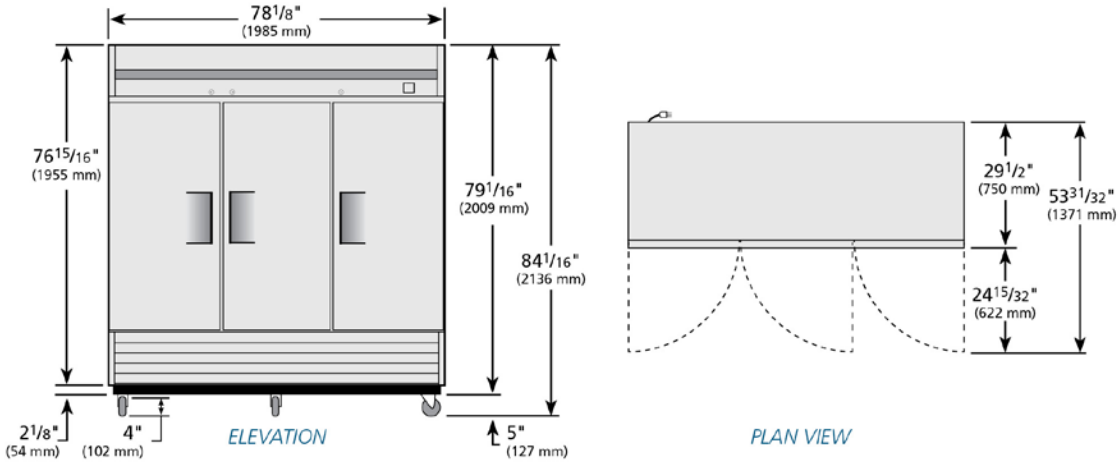

WARRANTY
One year warranty on all parts and labor and an additional 4 year warranty on compressor. (U.S.A. only)

METRIC DIMENSIONS ROUNDED UP TO THE NEAREST WHOLE MILLIMETER

SPECIFICATIONS SUBJECT TO CHANGE WITHOUT NOTICE

Model	Elevation	Right	Plan	3D	Back
TS-72F	TFEY01E	TFEY01S	TFEY01P	TFEY013	

TRUE FOOD SERVICE EQUIPMENT

2001 East Terra Lane • P.O. Box 970 • O'Fallon, Missouri 63366 • (636)240-2400 • Fax (636)272-2408 • (800)325-6152 • Intl. Fax# (001)636-272-7546 • www.truemfg.com