ALTO-SHAAM®

Heated Glass Shelf Merchandiser

ecosmart®

Model:

HSM-38/3S
HSM-48/5S

- **INSTALLATION**
- **OPERATION**
- **MAINTENANCE**

24•7 Your Service Hotline 1-800-558-8744

W164 N9221 Water Street • P.O. Box 450 • Menomonee Falls, Wisconsin 53052-0450 USA
PHONE: 262.251.3800 • 800.558.8744 USA/CANADA FAX: 262.251.7067 • 800.329.8744 U.S.A. ONLY
www.alto-shaam.com

PRINTED IN U.S.A.

MN-28755 • 07/11

Delivery 1
Unpacking 1
Safety Procedures and Precautions 2

Installation
Installation Requirements and Leveling 3
Clearance Requirements 3
Weights 3
Dimension Drawings 4
Options and Accessories 4
Product Capacity 4
Electrical Specifications 6
User Safety Information 7
Before Initial Use 7

Operating Instructions
Operation Instructions 8
General Holding Guidelines 9

Care and Cleaning
Cleaning and Preventative Maintenance 10
Protecting Stainless Steel Surfaces 10
Cleaning Agents 10
Cleaning Materials 10
Equipment Care and Cleaning 11

Sanitation
Sanitation/Food Safety 12
Internal Food Product Temperatures 12

Service
Exterior Service Views & Parts Lists 13-18
Electronic Components & Parts Lists 19-21

Wire Diagrams
Always refer to the wire diagram(s) included with the unit for most current version.

Warranty
Transportation Damage and Claims ..... Back Cover
Limited Warranty ..... Back Cover

DELIVERY

This Alto-Shaam appliance has been thoroughly tested and inspected to ensure only the highest quality unit is provided. Upon receipt, check for any possible shipping damage and report it at once to the delivering carrier. ***See Transportation Damage and Claims section located in this manual.***

This appliance, complete with unattached items and accessories, may have been delivered in one or more packages. Check to ensure that all standard items and options have been received with each model as ordered.

Save all the information and instructions packed with the appliance. Complete and return the warranty card to the factory as soon as possible to ensure prompt service in the event of a warranty parts and labor claim.

This manual must be read and understood by all people using or installing the equipment model. Contact the Alto-Shaam Tech Team Service Department if you have any questions concerning installation, operation, or maintenance.

NOTE: All claims for warranty must include the full model number and serial number of the unit.

UNPACKING

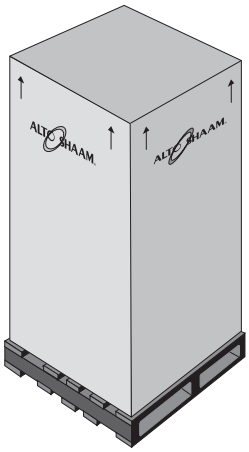

1. Carefully remove the appliance from the carton or crate.

   NOTE: Do not discard the carton and other packaging material until you have inspected the unit for hidden damage and tested it for proper operation.

2. Read all instructions in this manual carefully before initiating the installation of this appliance.

   DO NOT DISCARD THIS MANUAL.
   This manual is considered to be part of the appliance and is to be provided to the owner or manager of the business or to the person responsible for training operators. ***Additional manuals are available from the Alto-Shaam Tech Team Service Department.***

3. Remove all protective plastic film, packaging materials, and accessories from the appliance before connecting electrical power. Store any accessories in a convenient place for future use.

SAFETY PROCEDURES AND PRECAUTIONS

Knowledge of proper procedures is essential to the safe operation of electrically and/or gas energized equipment. In accordance with generally accepted product safety labeling guidelines for potential hazards, the following signal words and symbols may be used throughout this manual.

DANGER

Used to indicate the presence of a hazard that WILL cause severe personal injury, death, or substantial property damage if the warning included with this symbol is ignored.

WARNING

Used to indicate the presence of a hazard that CAN cause personal injury, possible death, or major property damage if the warning included with this symbol is ignored.

CAUTION

Used to indicate the presence of a hazard that can or will cause minor or moderate personal injury or property damage if the warning included with this symbol is ignored.

CAUTION

Used to indicate the presence of a hazard that can or will cause minor personal injury, property damage, or a potential unsafe practice if the warning included with this symbol is ignored.

NOTE: Used to notify personnel of installation, operation, or maintenance information that is important but not hazard related.

1. This appliance is intended to cook, hold or process foods for the purpose of human consumption. No other use for this appliance is authorized or recommended.
2. This appliance is intended for use in commercial establishments where all operators are familiar with the purpose, limitations, and associated hazards of this appliance. Operating instructions and warnings must be read and understood by all operators and users.
3. Any troubleshooting guides, component views, and parts lists included in this manual are for general reference only and are intended for use by qualified technical personnel.
4. This manual should be considered a permanent part of this appliance. This manual and all supplied instructions, diagrams, schematics, parts lists, notices, and labels must remain with the appliance if the item is sold or moved to another location.

NOTE

For equipment delivered for use in any location regulated by the following directive:

DO NOT DISPOSE OF ELECTRICAL OR ELECTRONIC EQUIPMENT WITH OTHER MUNICIPAL WASTE.

INSTALLATION

SITE INSTALLATION

This appliance, complete with unattached items and accessories, may be delivered in one or more packages. Check to insure that all accessories that were ordered have been received with the unit.

Lift the appliance from the pallet with a fork lift truck positioned at the back of the appliance. Care must be taken when moving this unit into place because of its glass components, and it tends to be top heavy. The five-shelf merchandiser has heavy duty swivel casters with brakes.

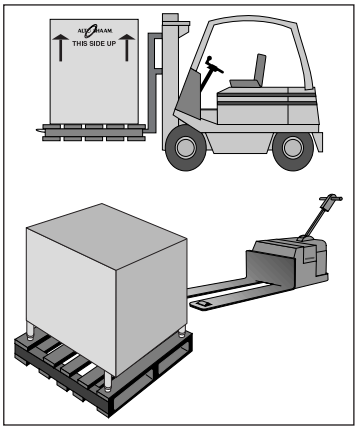

Alto-Shaam heated shelf units are designed for the purpose of maintaining hot food at a temperature for safe consumption. The unit must be installed on a level surface in a location that will permit the equipment to function for its intended purpose and allow adequate access for proper cleaning and maintenance. Level the appliance from side to side and back to back with the use of a spirit level.

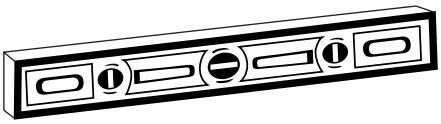

Do not install near a cold air source as a freezer, air conditioning vents, or in any area where outside air fluctuation can affect performance. This appliance must not be affected by steam, grease, dripping water, high temperatures, or any other adverse conditions.

CAUTION

TO PREVENT PERSONAL INJURY, USE CAUTION WHEN MOVING OR LEVELING THIS APPLIANCE.

DANGER

IMPROPER INSTALLATION, ALTERATION, ADJUSTMENT, SERVICE, OR MAINTENANCE COULD RESULT IN SEVERE INJURY, DEATH, OR CAUSE PROPERTY DAMAGE.

READ THE INSTALLATION, OPERATING AND MAINTENANCE INSTRUCTIONS THOROUGHLY BEFORE INSTALLING OR SERVICING THIS EQUIPMENT.

In order to maintain NSF standards, counter models must be sealed at bottom by NSF approved sealant, or equipped with casters or 4" (102mm) legs to provide minimum unobstructed space beneath the unit. Floor units must also be sealed at bottom or have casters or 6" (152mm) legs to provide minimum unobstructed space beneath the unit. Warranty will become null and void if these directions are not followed.

WEIGHT	HSM-38/3S - THREE SHELF UNIT
NET	335 lb (152 kg)
SHIP	595 lb (270 kg)
CRATE DIMENSIONS: L X W X H	36" x 46" x 65" (914mm x 1168mm x 1651mm)

WEIGHT	HSM-48/5S - FIVE SHELF UNIT
NET	540 lb (245 kg)
SHIP	965 lb (438 kg)
CRATE DIMENSIONS: L X W X H	45" x 52" x 87" (1143mm x 1321mm x 2210mm)

CLEARANCE REQUIREMENTS
4" (102mm) at back of unit

INSTALLATION

SITE INSTALLATION

HSM-48/5S

OPTIONS & ACCESSORIES	
Custom Panel Colors	
Black or Burgundy	Available
Pass-through Design	
Rear Sliding Doors	Available

PRODUCT CAPACITY - HSM-48/5S
150 lb (68 kg) MAXIMUM
EACH SHELF Ten (10) chicken boats with dome cover

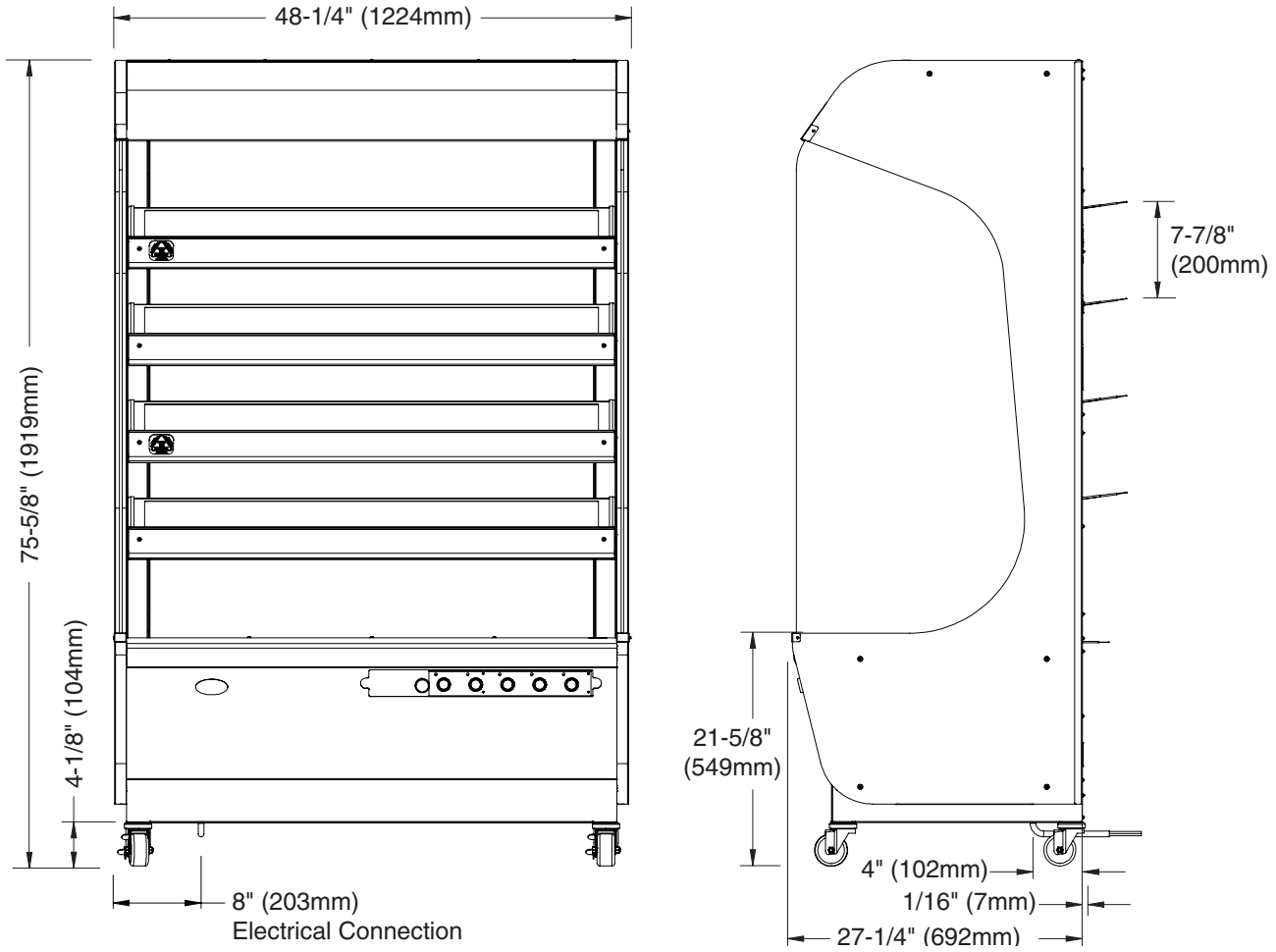

INSTALLATION

SITE INSTALLATION

HSM-38/3S

OPTIONS & ACCESSORIES	
Cabinet	
Burgundy	5002703
Brushed Stainless Steel	5004919
Black	5004920
Custom Panel Colors	
Burgundy or Black	Available
Pass-through Design	
Rear Sliding Doors	Available
Legs, 6" (152mm)	5205

PRODUCT CAPACITY - HSM-38/3S
72 lb (33 kg) MAXIMUM
EACH SHELF Eight (8) chicken boats with dome cover

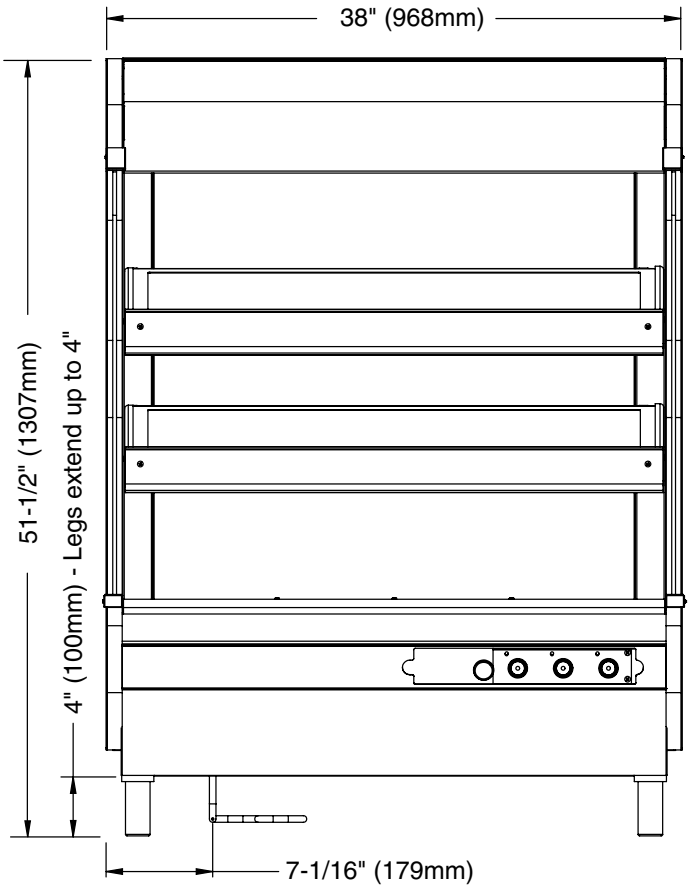

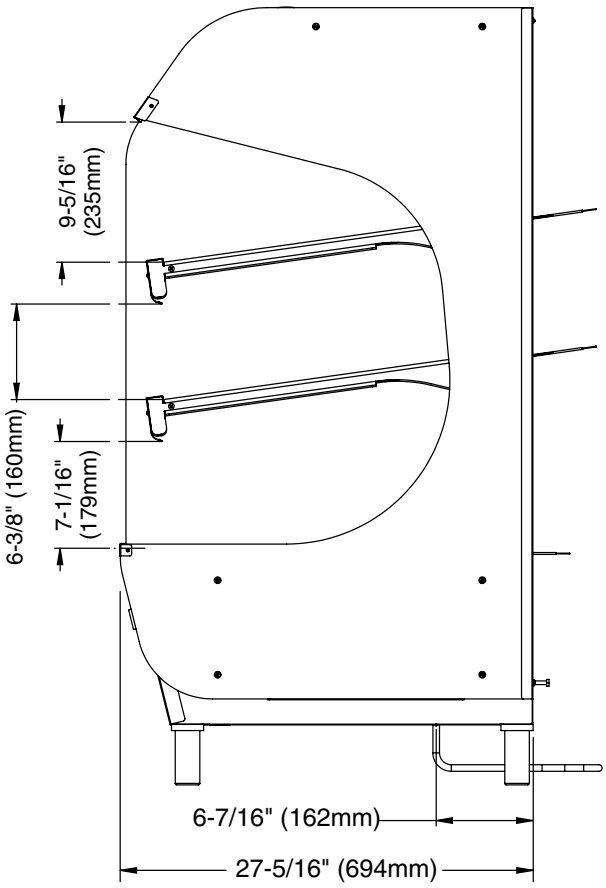

INSTALLATION

ELECTRICAL

An identification tag is permanently mounted on the cabinet.

Permanent wiring or electrical outlets for this appliance must be installed by a licensed electrician in accordance with local, country, or national codes.

This appliance must be connected to a dedicated circuit: *(see below)*

HSM-38/3S –– 20 Amp circuit
HSM-48/5S –– 30 Amp circuit

Always position the appliance so the power supply cord is easily accessible in case of emergency. Plug the unit into a properly grounded receptacle ONLY. Arcing will occur when connecting or disconnecting the unit unless all controls are in the OFF position.

For CE approved units: To prevent an electrical shock hazard between the appliance and other appliances or metal parts in close vicinity, an equalization-bonding stud is provided. An equalization bonding lead must be connected to this stud and the other appliances / metal parts to provide sufficient protection against potential difference. The terminal is marked with the following symbol.

Hard wired models:

Hard wired models must be equipped with a country certified external allpole disconnection switch with sufficient contact separation.

If a power cord is used for the connection of the product an oil resistant cord like H05RN or H07RN or equivalent must be used.

NOTE: CE approved appliances must be connected to an electrical circuit that is protected by an external GFCI outlet.

ELECTRICAL, HSM-48/5S — FIVE SHELF UNIT

VOLTAGE	PHASE	CYCLE/HZ	AMPS	kW	CORD, NO PLUG
208-240 (AGCY)	1	60	24	5.7	NEMA L6-30P
at 208	1	60	20.6	4.3	30A-250V
at 240	1	60	24	5.7	*RECOMMENDED*
MUST BE ON ITS OWN 30 AMP CIRCUIT					
380-415	1	50	10	5.7	CORD, NO PLUG

ELECTRICAL, HSM-38/3S — THREE SHELF UNIT

VOLTAGE	PHASE	CYCLE/HZ	AMPS	kW	CORD, NO PLUG
208-240 (AGCY)	1	60	10	5.7	NEMA 6-20P
at 208	1	60	10.8	2.3	20A-250V
at 240	1	60	12.5	3.0	*RECOMMENDED*
MUST BE ON IT'S OWN 20AMP CIRCUIT					
230	1	50	11.8	2.7	CORD, NO PLUG

Wire diagrams are included in the literature package supplied with the unit.

DANGER

ENSURE POWER SOURCE MATCHES VOLTAGE STAMPED ON APPLIANCE NAMEPLATE.

DANGER

To avoid electrical shock, this appliance MUST be adequately grounded in accordance with local electrical codes or, in the absence of local codes, with the current edition of the National Electrical Code ANSI/ NFPA No. 70. In Canada, all electrical connections are to be made in accordance with CSA C22.1, Canadian Electrical Code Part 1 or local codes.

INSTALLATION

USER SAFETY INFORMATION

This appliance is intended for use in commercial establishments where all operators are familiar with the purpose, limitations, and associated hazards of this appliance. Operating instructions and warnings must be read and understood by all operators and users.

Before Initial Use:

Before operating the merchandiser, clean it with a damp cloth and mild soap solution. Glass cleaner can be used on the glass.

Special Instructions:

1. Do not allow liquids or food to come in direct contact with the glass shelves.
2. Use hand protection when handling hot items.
3. Be certain only hot foods in appropriate heat tested containers are used.
4. It is recommended that plastic or paper containers be used. Pans or dishes can scratch the glass.
5. Be careful not to overheat as this may cause some containers to melt.
6. Do not stack containers.

Heating Characteristics

The heated upper glass surface provides even heat transfer to hot food in heat tested containers that are held in direct contact with the glass top.

To avoid personal injury and damage to the unit, treat glass with care.

Remember –– glass can shatter.

CAUTION

METAL PARTS OF THIS EQUIPMENT BECOME EXTREMELY HOT WHEN IN OPERATION. TO AVOID BURNS, ALWAYS USE HAND PROTECTION WHEN OPERATING THIS APPLIANCE.

OPERATION

HSM-48/5S - Five Shelf

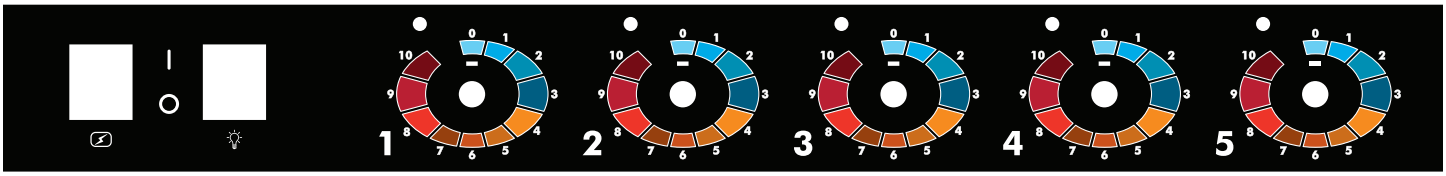

ON/OFF switch LIGHT switch | bottom shelf | 2nd shelf from bottom | 3rd shelf from bottom | 4th shelf from bottom | top shelf

HSM-38/3S - Three Shelf

ON/OFF switch LIGHT switch | bottom shelf | middle shelf | top shelf

1. **Check that the unit is connected to the appropriate power source.**

2. **Slide open the control panel. Press power and light switches on.**

3. **Turn thermostat(s) to a predetermined number and preheat for 30 minutes.**

   Each shelf has its own thermostat control numbering from 0 to 10. When the thermostat is turned clockwise to the determined number, the indicator light will illuminate and will remain lit as long as the shelf is calling for heat.

   The indicator light will go OUT when the temperature on the glass top reaches the set number determined by the operator. It will then cycle "ON/OFF" at this holding point.

   The shelves will hold a steady even heat as assigned. The user must determine what set point can be used regarding each food item held on its corresponding shelf. It is recommended that a similar food product be placed on each shelf.

   Always use the top shelf for the highest heat assignment, and the bottom shelf for the lowest heat assignment.

   The proper temperature range for the food being held will depend on the food type, the packaging, and the quantity of product. When holding food for prolonged periods, it is advisable to periodically check the internal temperature of each item to assure maintenance of the proper temperature range.

4. **Load prepackaged hot foods into the merchandiser.**

   Before loading food into the unit, use a pocket-type meat thermometer to make certain all products have reached an internal temperature of 160° F (71°C) or higher. If any food product is not at proper serving temperature, use a Halo Heat cooking and holding oven or Combitherm Oven to bring the product within the correct temperature range.

5. **Occasionally stir or rotate foods as needed.**

   Wipe spills immediately to assure maximum eye appeal and minimize end-of-the-day cleanup.

OPERATION

GENERAL HOLDING GUIDELINES

Chefs, cooks and other specialized food service personnel employ varied methods of cooking. Proper holding temperatures for a specific food product must be based on the moisture content of the product, product density, volume, and proper serving temperatures. Safe holding temperatures must also be correlated with palatability in determining the length of holding time for a specific product.

Halo Heat maintains the maximum amount of product moisture content without the addition of water, water vapor, or steam. Maintaining maximum natural product moisture preserves the natural flavor of the product and provides a more genuine taste. In addition to product moisture retention, the gentle properties of Halo Heat maintain a consistent temperature throughout the cabinet without the necessity of a heat distribution fan, thereby preventing further moisture loss due to evaporation or dehydration.

When product is removed from a high temperature cooking environment for immediate transfer into equipment with the lower temperature required for hot food holding, condensation can form on the outside of the product and on the inside of plastic containers used in self-service applications. Allowing the product to release the initial steam and heat produced by high temperature cooking can alleviate this condition. To preserve the safety and quality of freshly cooked foods, however, a maximum of 1 to 2 minutes must be the only time period allowed for the initial heat to be released from the product.

This appliance is equipped with a thermostat indicating a range of between 0 and 10. Use a metal-stemmed thermometer to measure the internal temperature of the product(s) being held. Adjust the thermostat setting to achieve the best overall setting based on internal product temperature.

HOLDING TEMPERATURE RANGE

MEAT	FAHRENHEIT	CELSIUS
BEEF ROAST — Rare	130°F	54°C
BEEF ROAST — Med/Well Done	155°F	68°C
BEEF BRISKET	160° — 175°F	71° — 79°C
CORN BEEF	160° — 175°F	71° — 79°C
PASTRAMI	160° — 175°F	71° — 79°C
PRIME RIB — Rare	130°F	54°C
STEAKS — Broiled/Fried	140° — 160°F	60° — 71°C
RIBS — Beef or Pork	160°F	71°C
VEAL	160° — 175°F	71° — 79°C
HAM	160° — 175°F	71° — 79°C
PORK	160° — 175°F	71° — 79°C
LAMB	160° — 175°F	71° — 79°C
POULTRY		
CHICKEN — Fried/Baked	160° — 175°F	71° — 79°C
DUCK	160° — 175°F	71° — 79°C
TURKEY	160° — 175°F	71° — 79°C
GENERAL	160° — 175°F	71° — 79°C
FISH/SEAFOOD		
FISH — Baked/Fried	160° — 175°F	71° — 79°C
LOBSTER	160° — 175°F	71° — 79°C
SHRIMP — Fried	160° — 175°F	71° — 79°C
BAKED GOODS		
BREADS/ROLLS	120° — 140°F	49° — 60°C
MISCELLANEOUS		
CASSEROLES	160° — 175°F	71° — 79°C
DOUGH — Proofing	80° — 100°F	27° — 38°C
EGGS —Fried	150° — 160°F	66° — 71°C
FROZEN ENTREES	160° — 175°F	71° — 79°C
HORS D'OEUVRES	160° — 180°F	71° — 82°C
PASTA	160° — 180°F	71° — 82°C
PIZZA	160° — 180°F	71° — 82°C
POTATOES	180°F	82°C
PLATED MEALS	140° — 165°F	60°— 74°C
SAUCES	140° — 200°F	60° — 93°C
SOUP	140° — 200°F	60° — 93°C
VEGETABLES	160° — 175°F	71° — 79°C

THE HOLDING TEMPERATURES LISTED ARE SUGGESTED GUIDELINES ONLY. ALL FOOD HOLDING SHOULD BE BASED ON INTERNAL PRODUCT TEMPERATURES. ALWAYS FOLLOW LOCAL HEALTH (HYGIENE) REGULATIONS FOR ALL INTERNAL TEMPERATURE REQUIREMENTS.

CARE AND CLEANING

CLEANING AND PREVENTIVE MAINTENANCE

PROTECTING STAINLESS STEEL SURFACES

It is important to guard against corrosion in the care of stainless steel surfaces. Harsh, corrosive, or inappropriate chemicals can completely destroy the protective surface layer of stainless steel. Abrasive pads, steel wool, or metal implements will abrade surfaces causing damage to this protective coating and will eventually result in areas of corrosion. Even water, particularly hard water that contains high to moderate concentrations of chloride, will cause oxidation and pitting that result in rust and corrosion. In addition, many acidic foods spilled and left to remain on metal surfaces are contributing factors that will corrode surfaces.

Proper cleaning agents, materials, and methods are vital to maintaining the appearance and life of this appliance. Spilled foods should be removed and the area wiped as soon as possible but at the very least, a minimum of once a day. Always thoroughly rinse surfaces after using a cleaning agent and wipe standing water as quickly as possible after rinsing.

CLEANING AGENTS

Use non-abrasive cleaning products designed for use on stainless steel surfaces. Cleaning agents must be chloride-free compounds and must not contain quaternary salts. Never use hydrochloric acid (muriatic acid) on stainless steel surfaces. Always use the proper cleaning agent at the manufacturer's recommended strength. Contact your local cleaning supplier for product recommendations.

CLEANING MATERIALS

The cleaning function can usually be accomplished with the proper cleaning agent and a soft, clean cloth. When more aggressive methods must be employed, use a non-abrasive scouring pad on difficult areas and make certain to scrub with the visible grain of surface metal to avoid surface scratches. Never use wire brushes, metal scouring pads, or scrapers to remove food residue.

⚠ CAUTION

TO PROTECT STAINLESS STEEL SURFACES, COMPLETELY AVOID THE USE OF ABRASIVE CLEANING COMPOUNDS, CHLORIDE BASED CLEANERS, OR CLEANERS CONTAINING QUATERNARY SALTS. NEVER USE HYDROCHLORIC ACID (MURIATIC ACID) ON STAINLESS STEEL. NEVER USE WIRE BRUSHES, METAL SCOURING PADS OR SCRAPERS.

CARE AND CLEANING

The cleanliness and appearan contribute considerably to operating efficiency and savory, appetizing food. Good equipment that is kept clean works better and lasts longer.

CLEAN THE UNIT THOROUGHLY AFTER EACH USE

1. Turn lights and adjustable thermostat(s) to the "OFF" position. Disconnect unit from power source, and let cool.
2. Remove, cover or wrap, and store food product under refrigeration.
3. ***Do not clean the glass when hot.*** The glass should be cleaned regularly with fresh warm water, a mild detergent, and a clean, non-abrasive cloth. Glass cleaner can be used.
4. Clean other interior components with a damp cloth or sponge and any good commercial detergent at the recommended strength.
5. Spray heavily soiled areas with a water soluble degreaser and let stand for 10 minutes, then remove soil with a plastic scouring pad.
6. Clean control panel, vents, handles, and gaskets thoroughly since these areas harbor food debris.

   NOTE:

   Avoid the use of abrasive cleaning compounds, chloride based cleaners, or cleaners containing quaternary salts. ***Never*** use hydrochloric acid (muriatic acid) on stainless steel.

7. Rinse surfaces by wiping with sponge and clean, warm water.
8. Remove excess water with sponge and wipe dry with a clean cloth or air dry.
9. Interior can be wiped with a sanitizing solution after cleaning and rinsing. This solution must be approved for use on food contact surfaces.
10. To help maintain the protective film coating on any polished stainless steel, clean the exterior of the cabinet with a cleaner recommended for stainless steel surfaces. Spray the cleaning agent on a clean cloth and wipe with the grain of the stainless steel.

Always follow appropriate state or local health (hygiene) regulations regarding all applicable cleaning and sanitation requirements for foodservice equipment.

DANGER

AT NO TIME SHOULD THE INTERIOR OR EXTERIOR BE STEAM CLEANED, HOSED DOWN, OR FLOODED WITH WATER OR LIQUID SOLUTION OF ANY KIND. DO NOT USE WATER JET TO CLEAN.

SEVERE DAMAGE OR ELECTRICAL HAZARD COULD RESULT.

WARRANTY BECOMES VOID IF APPLIANCE IS FLOODED

⚠ DANGER

DISCONNECT UNIT FROM POWER SOURCE BEFORE CLEANING OR SERVICING.

SANITATION

Food flavor and aroma are usually so closely related that it is difficult, if not impossible, to separate them. There is also an important, inseparable relationship between cleanliness and food flavor. Cleanliness, top operating efficiency, and appearance of equipment contribute considerably to savory, appetizing foods. Good equipment that is kept clean, works better and lasts longer.

Most food imparts its own particular aroma and many foods also absorb existing odors. Unfortunately, during this absorption there is not distinction between GOOD and BAD odors The majority of objectionable flavors and odors troubling food service operations are caused by bacteria growth. Sourness, rancidity, mustiness, stale or other OFF flavors are usually the result of germ activity.

The easiest way to insure full, natural food flavor is through comprehensive cleanliness. This means good control of both visible soil (dirt) and invisible soil (germs). A through approach to sanitation will provide essential cleanliness. It will assure an attractive appearance of equipment, along with maximum efficiency and utility. More importantly, a good sanitation program provides one of the key elements in the prevention of food-borne illnesses.

A controlled holding environment for prepared foods is just one of the important factors involved in the prevention of food-borne illnesses. Temperature monitoring and control during receiving, storage, preparation, and the service of foods are of equal importance.

The most accurate method of measuring safe temperatures of both hot and cold foods is by internal product temperature. A quality thermometer is an effective tool for this purpose, and should be routinely used on all products that require holding at a specific temperature.

A comprehensive sanitation program should focus on the training of staff in basic sanitation procedures. This includes personal hygiene, proper handling of raw foods, cooking to a safe internal product temperature, nd the routine monitoring of internal temperatures from receiving through service.

Most food-borne illnesses can be prevented through proper temperature control and a comprehensive program of sanitation. Both these factors are important to build quality service as the foundation of customer satisfaction. Safe food handling practices to prevent food-borne illness is of critical importance to the health and safety of your customers.

HACCP, an acronym for Hazard Analysis (at) Critical Control Points, is a quality control program of operating procedures to assure food integrity, quality, and safety. Taking steps necessary to augment food safety practices is both cost effective and relatively simple. While HACCP guidelines go far beyond the scope of this manual, additional information is available by contacting:

CENTER FOR FOOD SAFETY AND APPLIED NUTRITION FOOD AND DRUG ADMINISTRATION
1-888-SAFEFOOD

INTERNAL FOOD PRODUCT TEMPERATURES		
HOT FOODS		
DANGER ZONE	40° TO 140°F	(4° TO 60°C)
CRITICAL ZONE	70° TO 120°F	(21° TO 49°C)
SAFE ZONE	140° TO 165°F	(60° TO 74°C)
COLD FOODS		
DANGER ZONE	ABOVE 40°F	(ABOVE 4°C)
SAFE ZONE	36° TO 40°F	(2° TO 4°C)
FROZEN FOODS		
DANGER ZONE	ABOVE 32°F	(ABOVE 0°C)
CRITICAL ZONE	0° TO 32°F	(-18° TO 0°C)
SAFE ZONE	0°F or below	(-18°C or below)

EXTERIOR SERVICE VIEW (A)

HSM-48/5S Shown

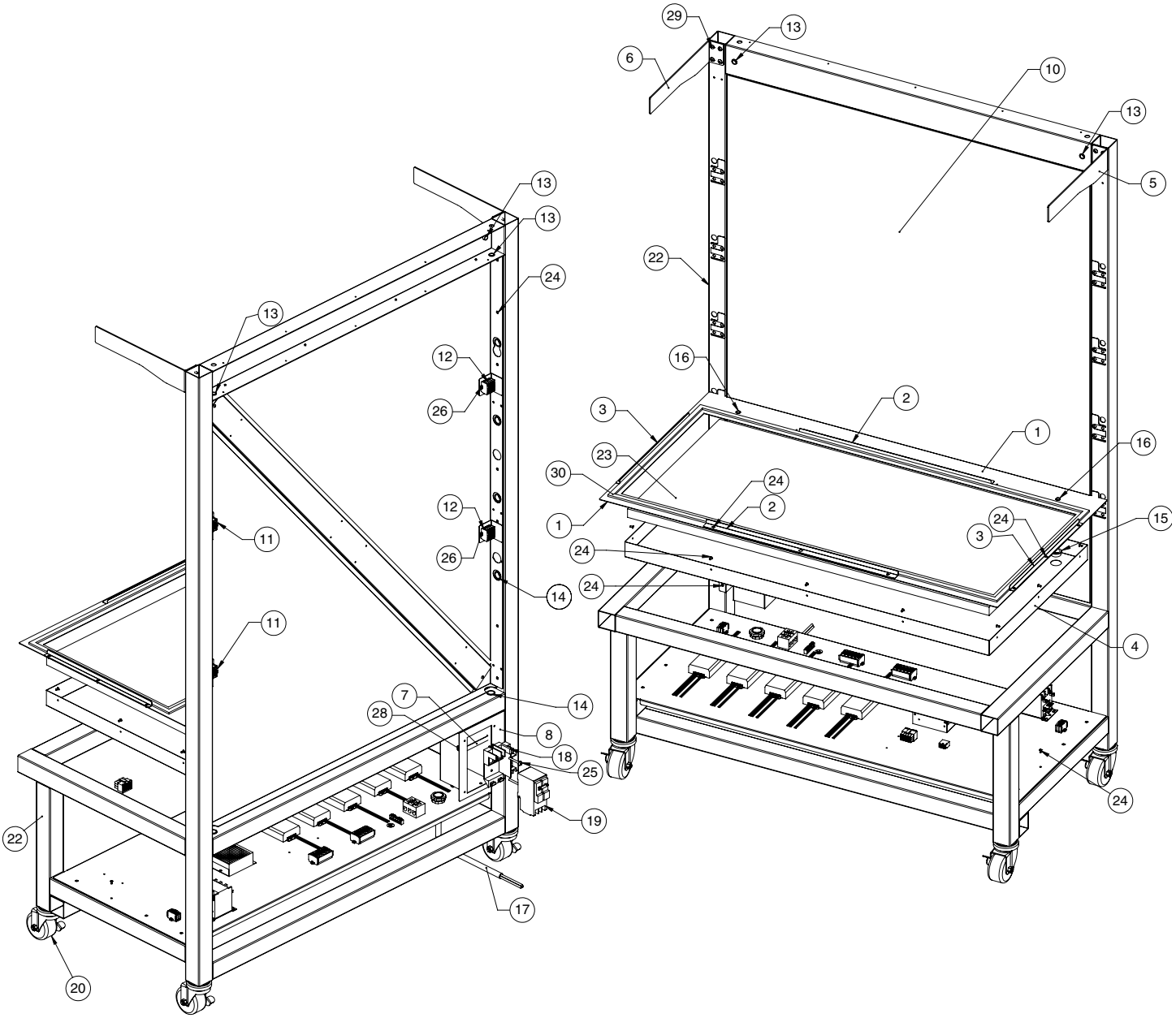

Part numbers and drawings are subject to change without notice.

EXTERIOR PARTS LIST (A)

	MODEL >	HSM-38/3S		HSM-48/5S	
ITEM	DESCRIPTION	PART NO.	QTY	PART NO.	QTY
1	BASE GLASS PANEL SEPARATOR	1003446	1	1002831	1
2	BASE PANEL SHELF FT/BK TRIM	1003439	2	1002833	2
3	BASE PANEL GLASS RT/LF TRIM	1002834	2	1002834	2
4	INSULATION PANEL	1003501	1	1003932	1
5	FRAME RT TOP SUPPORT BRACKET	1004336	1	1004336	1
6	FRAME LF TOP SUPPORT BRACKET	1004337	1	1004337	1
7	BRACKET, RETAINER, GFCI	—	—	1009427	1
8	PANEL, CIRCUIT BREAKER	—	—	5002006	1
9	GFCI HOUSING, HSM-38 (NOT SHOWN)	5003681	1	—	—
10	INNER WALL PANEL ASSEMBLY	5003665	1	5002408	1
11	BLOCK, TERMINAL, POWER	BK-34069	1	BK-34069	2
12	BLOCK, TERMINAL, SENSOR	BK-34070	1	BK-34070	2
13	1/2" HOLE BUSHING	BU-3006	4	BU-3006	4
14	3/4" WHITE SNAP BUSHING	BU-3008	6	BU-3008	12
15	1" HOLE BUSHING	BU-33619	2	BU-33619	3
16	3/8" BLACK HOLE BUSHING	BU-3419	10	BU-3419	2
17	CORDSET 208-240V 230V 380-415V	CD-3607 CD-33490 —	9 FT	CD-3304 — CD-3304	9 FT
18	GFCI BASE, 50 AMP, 120/240V SERIES 1	CI-34104	1	CI-34104	1
19	GFCI, 50 AMP, 120/240V. SERIES 1	CI-34105	1	CI-34105	1
20	CASTER, 3", SWIVEL W/BRAKE	—	—	CS-24351	4
21	FEET, 4", ADJUSTABLE, HSM-38 (NOT SHOWN)	FE-27153	4	—	—
22	FRAME	FR-26267	1	FR-26268	1
23	1.000" THICK YELLOW BOARD INSULATION	IN-22265	22SQFT	IN-22265	24SQFT
24	RIVET, BLIND, #44,STNLS	RI-2100	54	RI-2100	48
25	10-32 X 1 1/2" PHIL SCREW 18-8 S/S	SC-2162	2	SC-2162	2
26	SCREW 6-32 X 1/4" PAN HD	—	—	SC-22500	8
27	SCREW 6-32 X 3/8" RD HD, HSM-38 (NOT SHOWN)	SC-23455	4	—	—
28	8-32 X 1/4" PHIL SCREW	SC-2459	1	SC-2459	1
29	SCREW,10-32 X1/2, NF PHIL TRUSS	SC-2661	12	SC-2661	8
30	3/16" X 1/2" FOAM TAPE	TA-25621	12 FT	TA-25621	12 FT

⚠ DANGER

ENSURE POWER SOURCE MATCHES VOLTAGE STAMPED ON APPLIANCE NAMEPLATE.

⚠ DANGER

LOCK-OUT OR POST BREAKER PANEL UNTIL SERVICE WORK HAS BEEN COMPLETED.

EXTERIOR SERVICE VIEW (B)

HSM-48/5S Shown

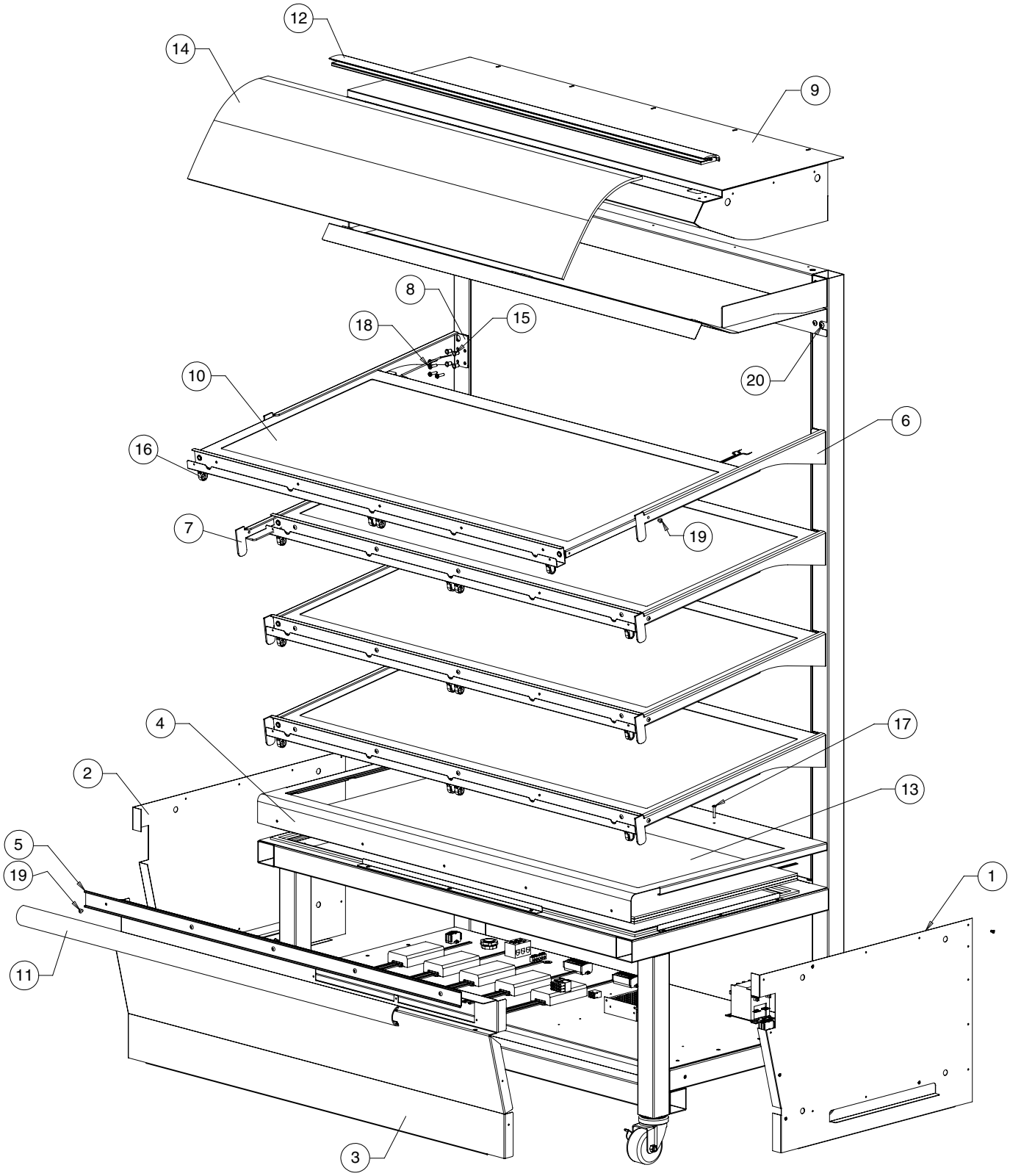

Part numbers and drawings are subject to change without notice.

EXTERIOR PARTS LIST (B)

	MODEL >	HSM-38/3S		HSM-48/5S	
ITEM	DESCRIPTION	PART NO.	QTY	PART NO.	QTY
1	RT LOWER SIDE PANEL STAINLESS STEEL BLACK BURGUNDY	1005706 1005707 1003447	1	1005473 1004668 1002780	1
2	LF LOWER SIDE PANEL STAINLESS STEEL BLACK BURGUNDY	1005708 1005709 1003448	1	1005474 1004669 1002781	1
3	FRONT COVER PANEL STAINLESS STEEL BLACK BURGUNDY	1005710 1005711 1003441	1	1010928 1010927 1010926	1
4	BASE GLASS COVER PANEL	1003445	1	1002832	1
5	BUMPER RIGID BASE	1003454	1	1003452	1
6	SHELF RT END SUPPORT BRACKET	1005421	2	1005421	4
7	SHELF LF END SUPPORT BRACKET	1005422	2	1005422	4
8	SHIM, SHELF	1006253	4	1006253	8
9	CANOPY SPOT STAINLESS STEEL BLACK BURGUNDY	5004558 5004559 5002540	1	5004423 5003639 5002003	1
10	SHELF ASSEMBLY W/ HEATED GLASS	5004498	2	5004409	4
11	BUMPER TOP, BLACK	BM-26261	3 FT	BM-26261	4 FT
12	CLAMP ASSEMBLY	CM-26878	1	CM-26879	1
13	1100W HEATED GLASS	GL-26512	1	GL-25860	1
14	FRONT CURVED GLASS	GL-26275	1	GL-26081	1
15	10-32 THREADED INSERT	HG-22672	16	HG-22672	32
16	RECEPTACLE	RP-34160	6	RP-34160	12
17	SCREW,8-32 X 1, NC PHILLIPS PAN	SC-2069	5	SC-2069	3
18	10-32 X 3/4 PAN HD	SC-2071	16	SC-2071	32
19	8-32 X 1/4" PHIL SCREW	SC-2459	64	SC-2459	14
20	SCREW,10-32 X1/2,NF PHIL TRUSS M/S,18-8 SS	SC-2661	12	SC-2661	36

⚠ DANGER

ENSURE POWER SOURCE MATCHES VOLTAGE STAMPED ON APPLIANCE NAMEPLATE.

⚠ DANGER

LOCK-OUT OR POST BREAKER PANEL UNTIL SERVICE WORK HAS BEEN COMPLETED.

EXTERIOR SERVICE VIEW Ⓒ

HSM-48/5S Shown

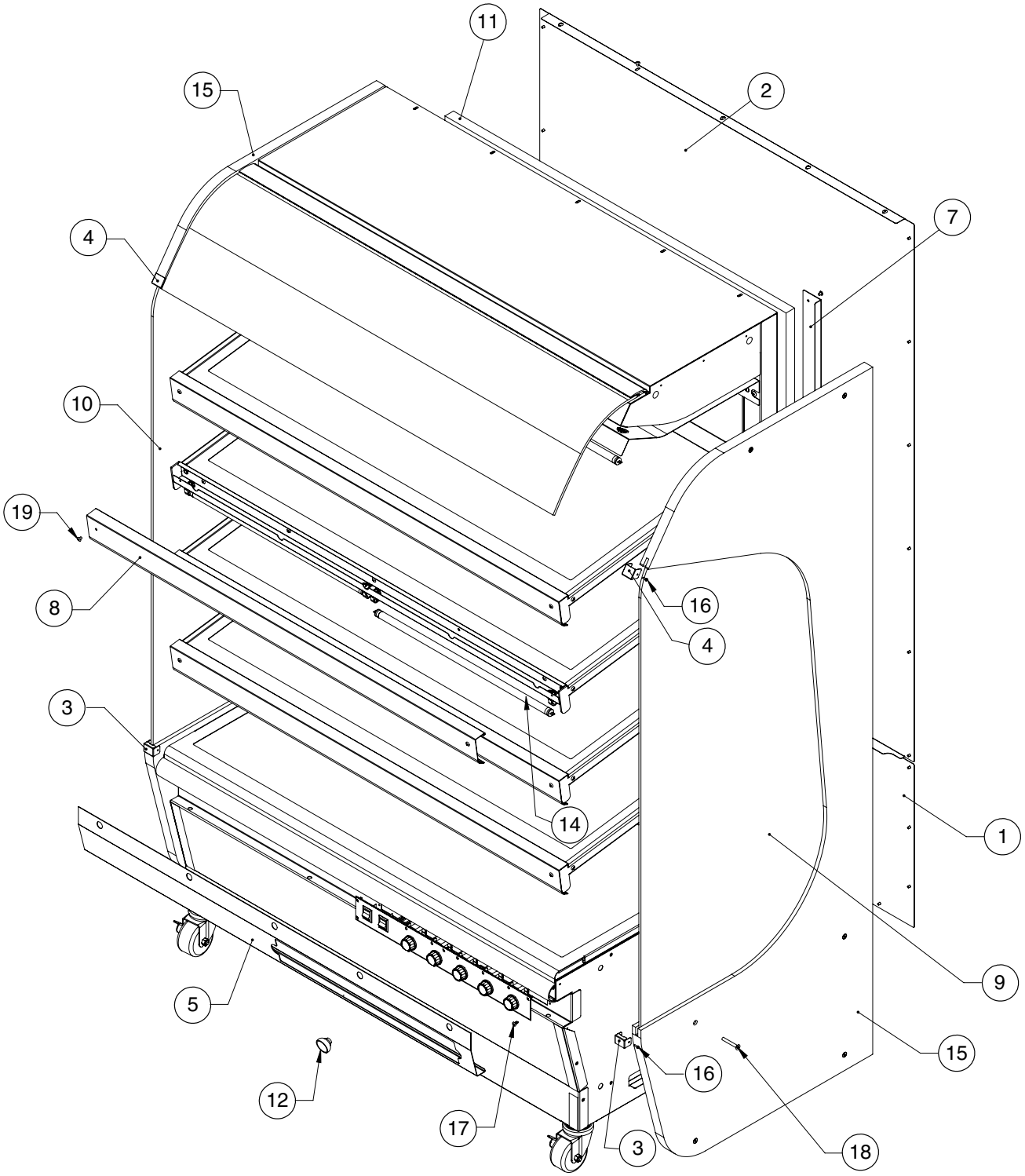

Part numbers and drawings are subject to change without notice.

EXTERIOR PARTS LIST (C)

	MODEL >	HSM-38/3S		HSM-48/5S	
ITEM	DESCRIPTION	PART NO.	QTY	PART NO.	QTY
1	PANEL, COVER, LOWER BACK	1003444	1	1002785	1
2	UPPER BACK COVER PANEL W/ VENTS	1003443	1	1002786	1
3	BOTTOM END GLASS CLIP HOLDER	1002820	2	1002820	2
4	TOP END GLASS CLIP HOLDER	1002839	2	1002839	2
5	FRONT SLIDE COVER PANEL	1003903	1	1010815	1
6	FRONT SLIDING PANEL (NOT SHOWN)	1003904	1	_	1
7	FORMICA SIDE ATTACHMENT BRACKET	1003955	2	1003901	2
8	SHELF FRONT COVER	1005626	2	1005420	4
9	RT SIDE END GLASS	GL-26273	1	GL-25945	1
10	LF SIDE END GLASS	GL-26272	1	GL-25951	1
11	1.000" THICK YELLOW BOARD INSULATION	IN-22265	22 FT	IN-22265	16 FT
12	KNOB, STAINLESS, SLIDING PANEL	KN-26379	1	KN-26379	1
13	RATING TAG LABEL	LA-26348	2	LA-26348	2
14	LAMPS, FLORESCENTS, SOFT WHITE 208-240V 230V 380-415V	LP-34156 LP-33822 LP-33822	3	LP-33822 LP-33822 LP-33822	10
15	FORMICA SIDE PANEL	PE-26274	2	PE-26068	2
16	SCREW, M2.9X9, 5MM, PAN	SC-22305	4	SC-22305	4
17	8-32 X 3/8" TRUSS HEAD	SC-22378	12	SC-22378	6
18	M6 X 45 FLAT HEAD	SC-24978	12	SC-24019	12
19	8-32 X 1/4" PHIL SCREW	SC-2459	64	SC-2459	45

⚠ DANGER

ENSURE POWER SOURCE MATCHES VOLTAGE STAMPED ON APPLIANCE NAMEPLATE.

⚠ DANGER

LOCK-OUT OR POST BREAKER PANEL UNTIL SERVICE WORK HAS BEEN COMPLETED.

ELECTRONIC COMPONENTS (D)

HSM-48/5S

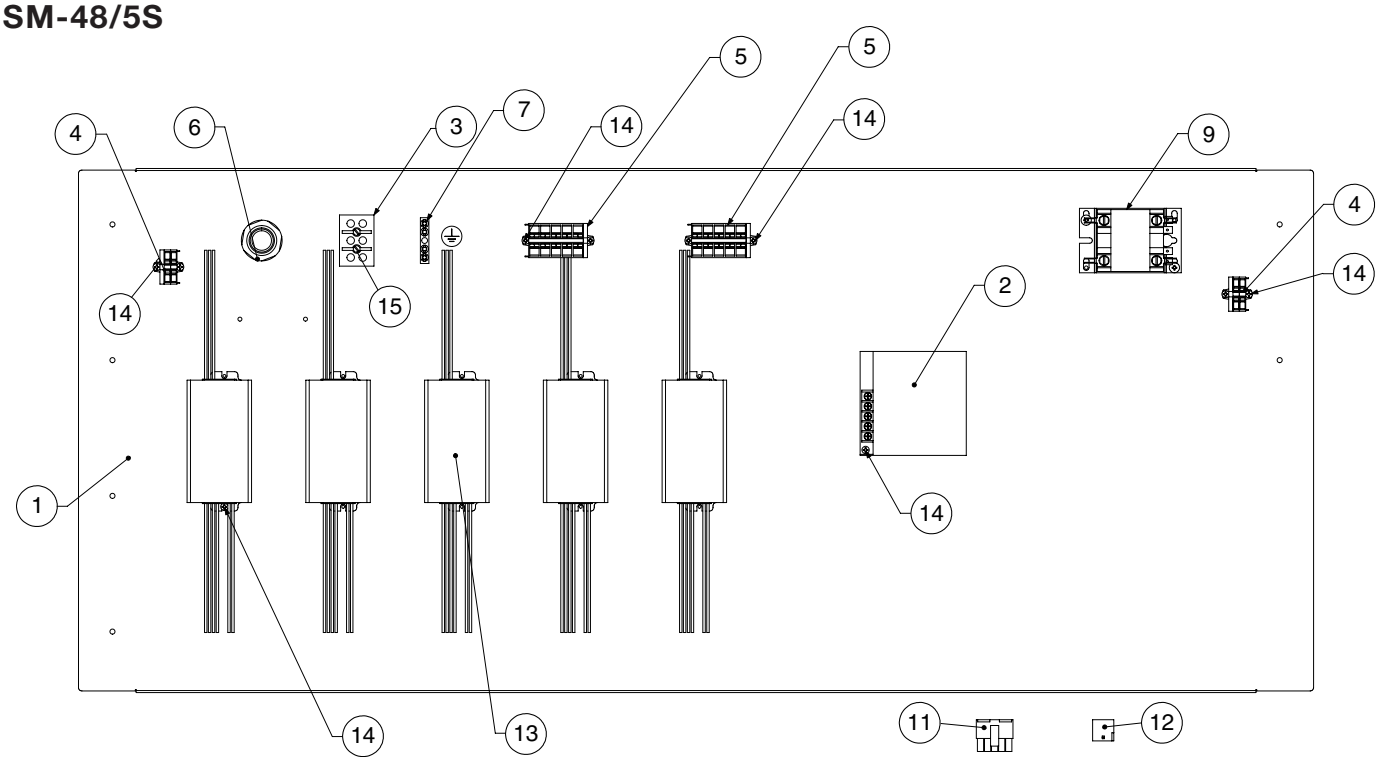

HSM-38/3S

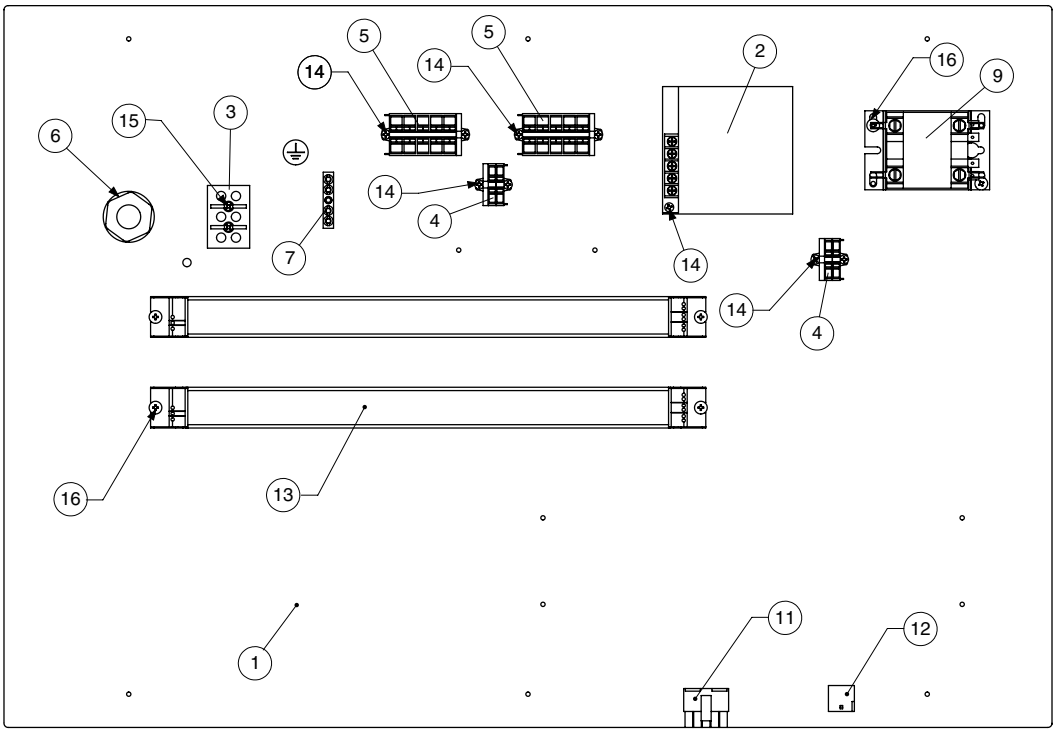

ELECTRONIC COMPONENTS (D)

ITEM	DESCRIPTION	PART NO.
1	ELECTRONIC PANEL SPOT, HSM-48	5002008
	ELECTRONIC PANEL SPOT, HSM-38	5002542
2	POWER SUPPLY	BA-33554
3	T-BLOCK	BK-3019
4	BLOCK, TERMINAL, SENSOR & POWER	BK-34071
5	MODULAR BLOCK, 5 PIECE	BK-25567
6	BUSHING STRAIN RELIEF INT	BU- 33505
7	GROUND BAR	CI-3878
*8	CLAMP, WIRE, SELF-ADHESIVE	CM-3585
9	CONTACTOR 208/240V 3 POLE 25 AMP	CN-3052
*10	CONNECTOR, 2 CONDUCTOR	CR-34057
11	CONNECTOR, FEMALE, .093	CR-34139
12	CONNECTOR, FEMALE, .062	CR-34141
13	BALLAST, DUAL LIGHT, 38/3S	LP-34135
	BALLAST, DUAL LIGHT, 48/5S	LP-34024
14	SCREW, 6-32 X 3/8 RD HD	SC-23455
*15	6-32 X 1-1/4 ROUND HEAD	SC-2365
*16	8-32 X 1/4 PHIL SCREW	SC-2459
	*NOT SHOWN	

⚠ DANGER

ENSURE POWER SOURCE MATCHES VOLTAGE STAMPED ON APPLIANCE NAMEPLATE.

⚠ DANGER

LOCK-OUT OR POST BREAKER PANEL UNTIL SERVICE WORK HAS BEEN COMPLETED.

CIRCUIT BREAKER ASSEMBLY

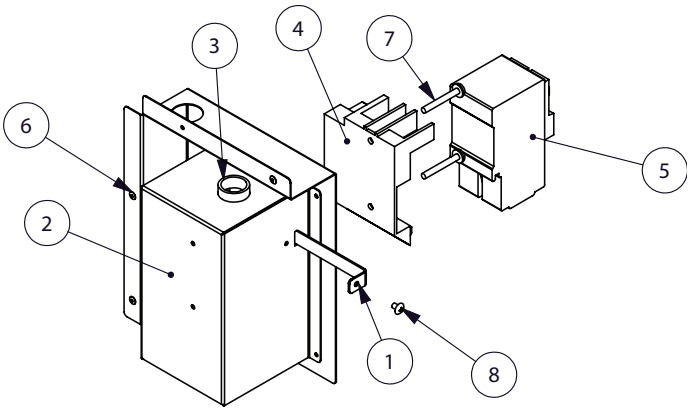

ITEM	DESCRIPTION	PART NO.
1	BRACKET, RETAINER	1009427
2	PANEL, CIRCUIT BREAKER	5002006
3	1" HOLE BUSHING	BU-33619
4	GFCI BASE 50 AMP, 120/240V, SERIES 1	CI-34104
5	GFCI 50 AMP, 120/240V, SERIES 1	CI-34105
6	RIVET, BLIND, #44, STNLS	RI-2100
7	10-32 X 1-1/2 PHIL SCREW 18-8 S/S	SC-2162
8	8-32 X 1/4 PHIL SCREW	SC-2459

Part numbers and drawings are subject to change without notice.

ELECTRONIC COMPONENTS (E)

HSM-48/5S

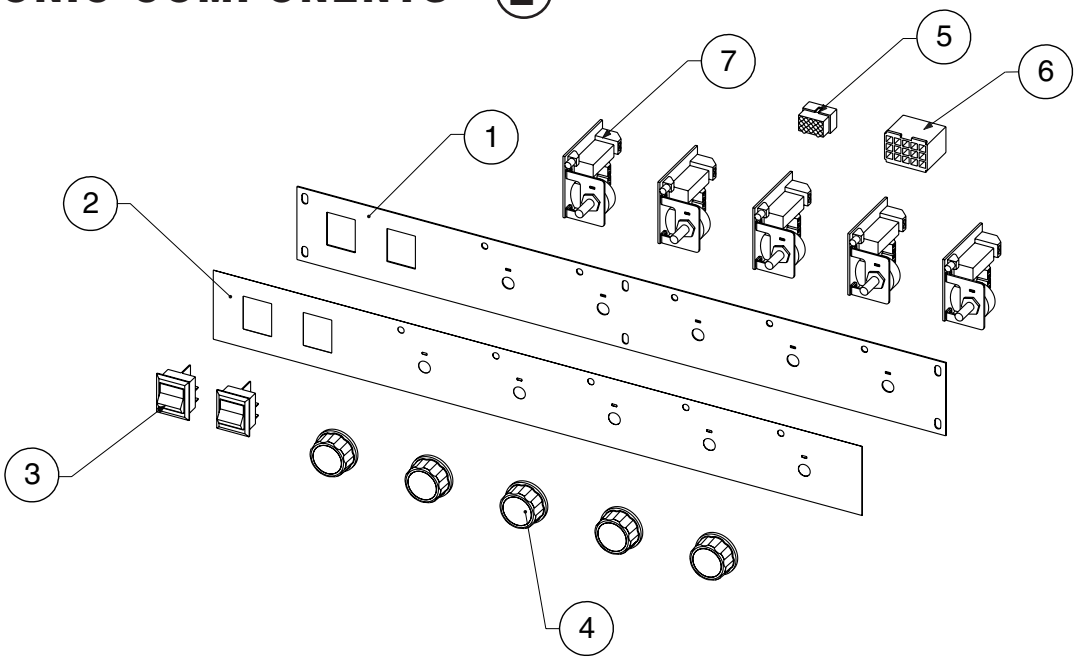

HSM-38/3S

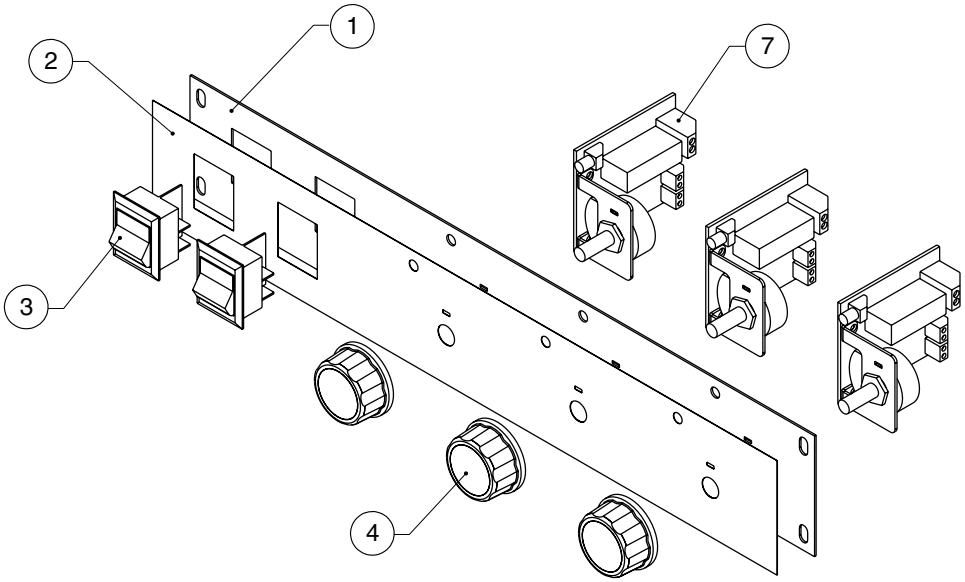

(E)

	MODEL >	HSM-38/3S		HSM-48/5S	
ITEM	DESCRIPTION	PART NO.	QTY	PART NO.	QTY
1	CONTROL FACE PLATE	1003500	1	1003410	1
2	PANEL, OVERLAY, VERT. 5 TIER, ELEC	PE-26096	1	PE-26096	1
3	22 AMP @ 125V/16AMP@250V	SW-3887	2	SW-3887	2
4	KNOB, PLASTIC, BLACK, 1.30" DIA.	KN-26290	3	KN-26290	5
5	CONNECTOR, MALE, .062	_	_	CR-34140	1
6	CONNECTOR, MALE, .093	_	_	CR-34138	1
7	CONTROL, 8 AMP, DIGITAL	BA-34294	3	BA-34294	5

Part numbers and drawings are subject to change without notice.

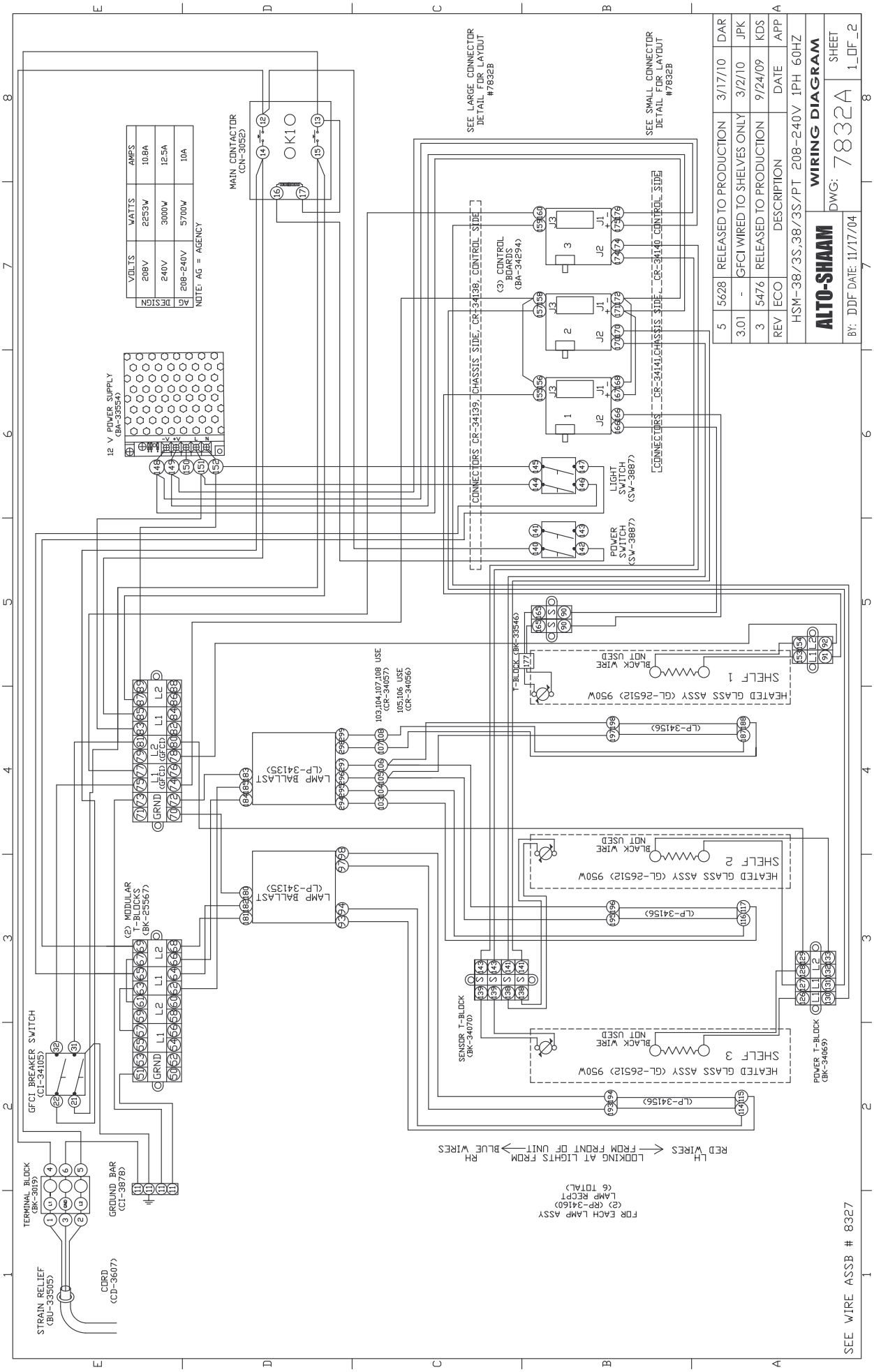
ALTO-SHAAM
WIRING DIAGRAM
DWG: 7832A
SHEET 1_OF_2
BY: DDF DATE: 11/17/04
HSM-38/3S,38/3S/PT 208-240V 1PH 60HZ
REV ECO DESCRIPTION DATE APP
5 5628 RELEASED TO PRODUCTION 3/17/10 DAR
3.01 - GFCI WIRED TO SHELVES ONLY 3/2/10 JPK
3 5476 RELEASED TO PRODUCTION 9/24/09 KDS
SEE LARGE CONNECTOR DETAIL FOR LAYOUT #7832B
SEE SMALL CONNECTOR DETAIL FOR LAYOUT #7832B
MAIN CONTACTOR (CN-3052)
VOLTS WATTS AMPS
208V 2253W 10.8A
240V 3000W 12.5A
208-240V 5700W 10A
AG DESIGN
NOTE: AG = AGENCY
12 V POWER SUPPLY (BA-33554)
(3) CONTROL BOARDS (BA-34294)
CONNECTORS CR-34139, CHASSIS SIDE, CR-34138, CONTROL SIDE
CONNECTORS CR-34141,CHASSIS SIDE, CR-34140 CONTROL SIDE
LIGHT SWITCH (SW-3887)
POWER SWITCH (SW-3887)
T-BLOCK (BK-33546)
HEATED GLASS ASSY (GL-26512) 950W
SHELF 1
SHELF 2
SHELF 3
BLACK WIRE NOT USED
(LP-34156)
LAMP BALLAST (LP-34135)
103,104,107,108 USE (CR-34057)
105,106 USE (CR-34056)
(2) MODULAR T-BLOCKS (BK-25567)
GFCI BREAKER SWITCH (CI-34105)
SENSOR T-BLOCK (BK-34070)
POWER T-BLOCK (BK-34069)
TERMINAL BLOCK (BK-3019)
GROUND BAR (CI-3878)
STRAIN RELIEF (BU-33505)
CORD (CD-3607)
FOR EACH LAMP ASSY (2) (RP-34160) LAMP RECEPT (6 TOTAL)
LH RED WIRES ← LOOKING AT LIGHTS FROM FRONT OF UNIT → RH BLUE WIRES
SEE WIRE ASSB # 8327

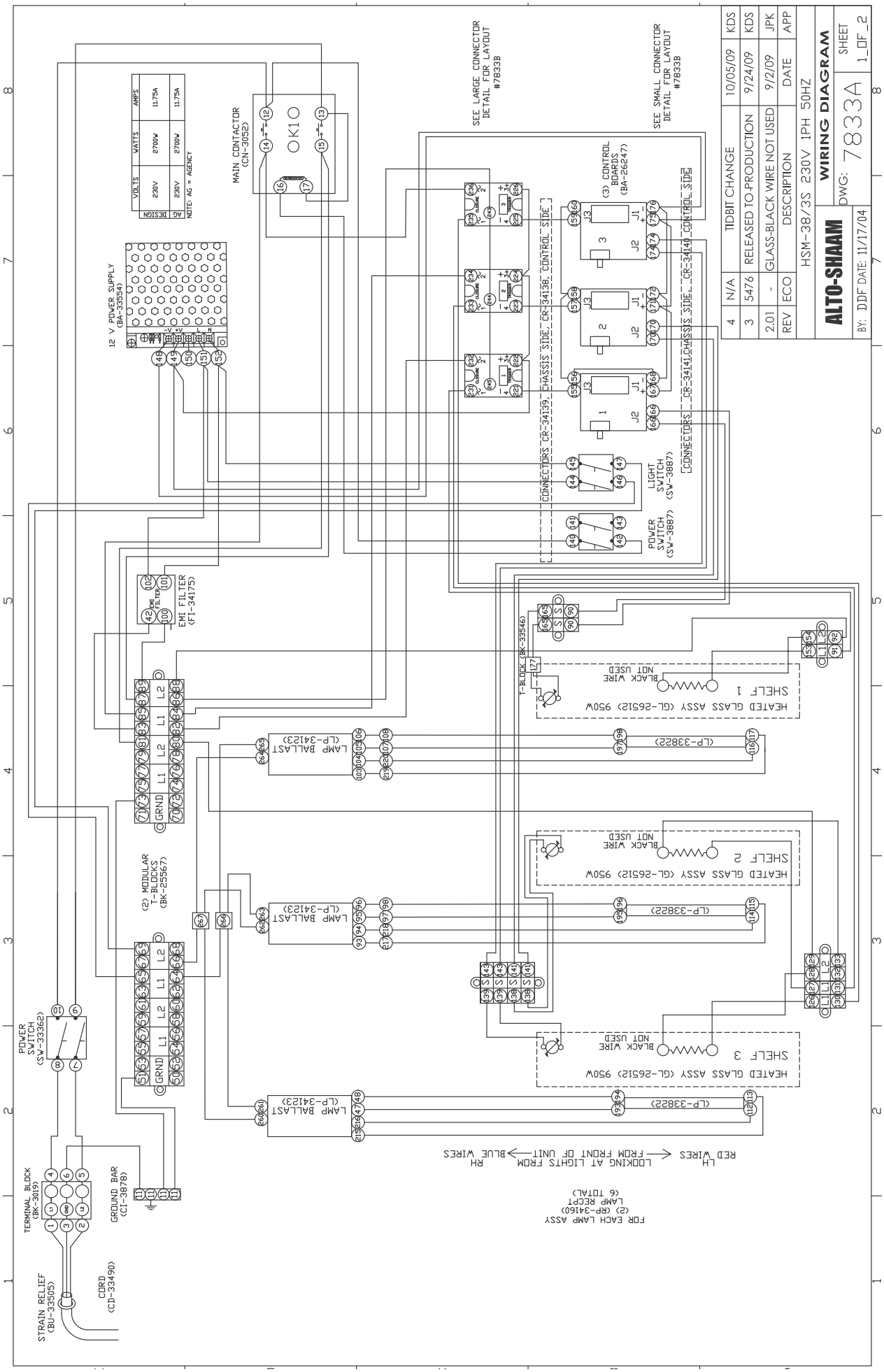
ALTO-SHAAM
WIRING DIAGRAM
DWG: 7833A
SHEET 1_OF_2
BY: DDF DATE: 11/17/04
HSM-38/3S 230V 1PH 50HZ
REV ECO DESCRIPTION DATE APP
4 N/A TIDBIT CHANGE 10/05/09 KDS
3 5476 RELEASED TO PRODUCTION 9/24/09 KDS
2.01 - GLASS-BLACK WIRE NOT USED 9/2/09 JPK
DESIGN VOLTS WATTS AMPS
AG 230V 2700W 11.75A
NOTE: AG = AGENCY
MAIN CONTACTOR (CN-3052)
SEE LARGE CONNECTOR DETAIL FOR LAYOUT #7833B
SEE SMALL CONNECTOR DETAIL FOR LAYOUT #7833B
(3) CONTROL BOARDS (BA-26247)
12 V POWER SUPPLY (BA-33554)
CONNECTORS CR-34139, CHASSIS SIDE, CR-34138, CONTROL SIDE
CONNECTORS CR-34141, CHASSIS SIDE, CR-34140 CONTROL SIDE
LIGHT SWITCH (SW-3887)
POWER SWITCH (SW-3887)
EMI FILTER (FI-34175)
T-BLOCK (BK-33546)
HEATED GLASS ASSY (GL-26512) 950W
SHELF 1
SHELF 2
SHELF 3
BLACK WIRE NOT USED
LAMP BALLAST (LP-34123)
(LP-33822)
(2) MODULAR T-BLOCKS (BK-25967)
POWER SWITCH (SW-33362)
TERMINAL BLOCK (BK-3019)
GROUND BAR (CI-3878)
STRAIN RELIEF (BU-33505)
CORD (CD-33490)
FOR EACH LAMP ASSY (2) (RP-34160) LAMP RECPT (6 TOTAL)
LOOKING AT LIGHTS FROM FROM FRONT OF UNIT
LH RED WIRES
RH BLUE WIRES

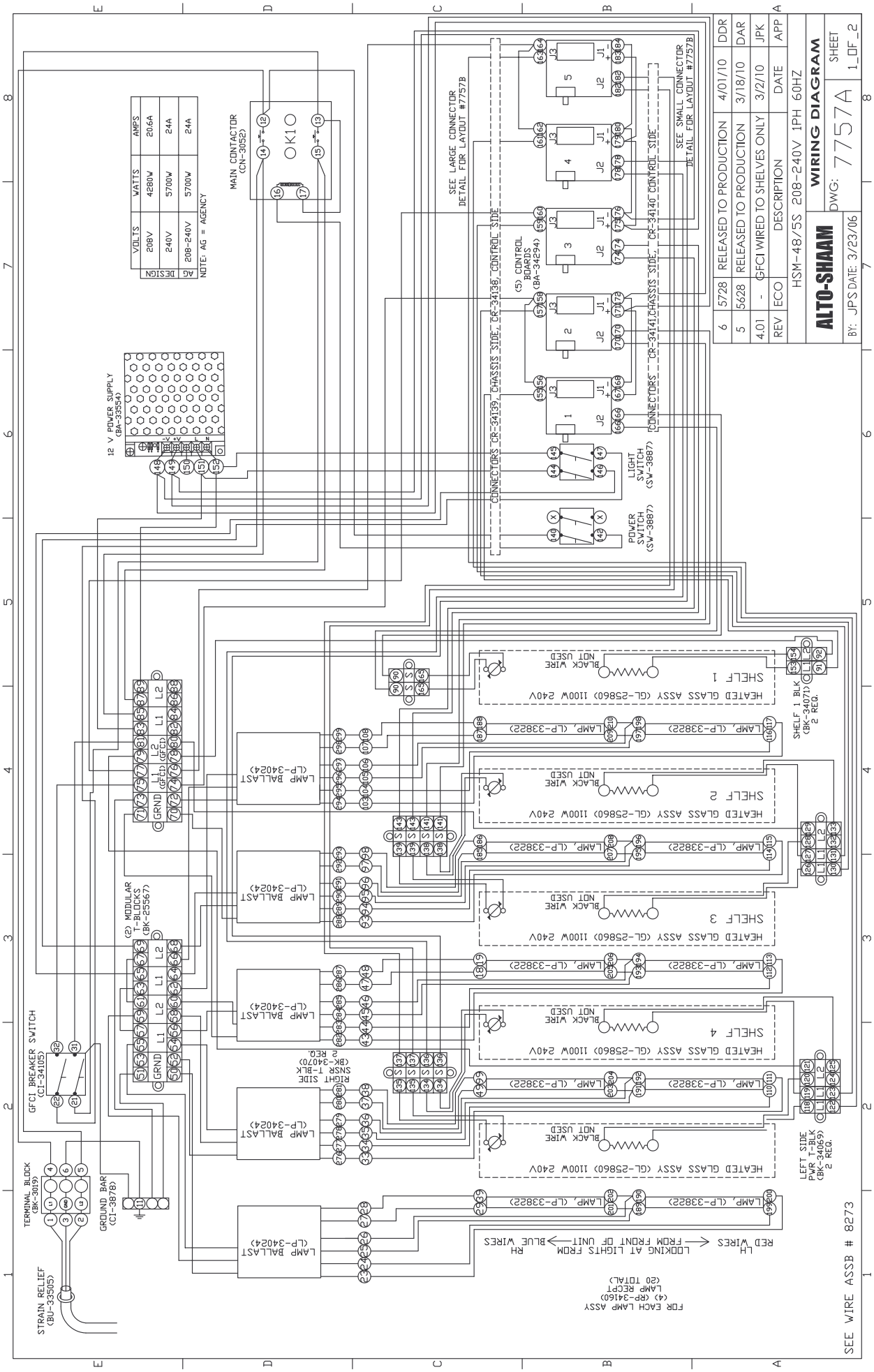
ALTO-SHAAM
WIRING DIAGRAM
DWG: 7757A
SHEET 1_OF_2
BY: JPS DATE: 3/23/06
HSM-48/5S 208-240V 1PH 60HZ
REV ECO DESCRIPTION DATE APP
6 5728 RELEASED TO PRODUCTION 4/01/10 DDR
5 5628 RELEASED TO PRODUCTION 3/18/10 DAR
4.01 - GFCI WIRED TO SHELVES ONLY 3/2/10 JPK
NOTE: AG = AGENCY
DESIGN VOLTS WATTS AMPS
AG 208V 4280W 20.6A
240V 5700W 24A
208-240V 5700W 24A
MAIN CONTACTOR (CN-3052)
SEE LARGE CONNECTOR DETAIL FOR LAYOUT #7757B
SEE SMALL CONNECTOR DETAIL FOR LAYOUT #7757B
CONNECTORS CR-34139, CHASSIS SIDE, CR-34138, CONTROL SIDE
CONNECTORS CR-34141,CHASSIS SIDE, CR-34140 CONTROL SIDE
(5) CONTROL BOARDS (BA-34294)
12 V POWER SUPPLY (BA-33554)
LIGHT SWITCH (SW-3887)
POWER SWITCH (SW-3887)
HEATED GLASS ASSY (GL-25860) 1100W 240V
BLACK WIRE NOT USED
SHELF 1
SHELF 2
SHELF 3
SHELF 4
LAMP, (LP-33822)
LAMP BALLAST (LP-34024)
SHELF 1 BLK (BK-34071) 2 REQ.
LEFT SIDE PWR T-BLK (BK-34069) 2 REQ.
RIGHT SIDE SNSR T-BLK (BK-34070) 2 REQ.
(2) MODULAR T-BLOCKS (BK-25567)
GFCI BREAKER SWITCH (CI-34105)
TERMINAL BLOCK (BK-3019)
GROUND BAR (CI-3878)
STRAIN RELIEF (BU-33505)
FOR EACH LAMP ASSY (4) (RP-34160) LAMP RECPT (20 TOTAL)
LOOKING AT LIGHTS FROM FROM FRONT OF UNIT
LH RED WIRES
RH BLUE WIRES
SEE WIRE ASSB # 8273

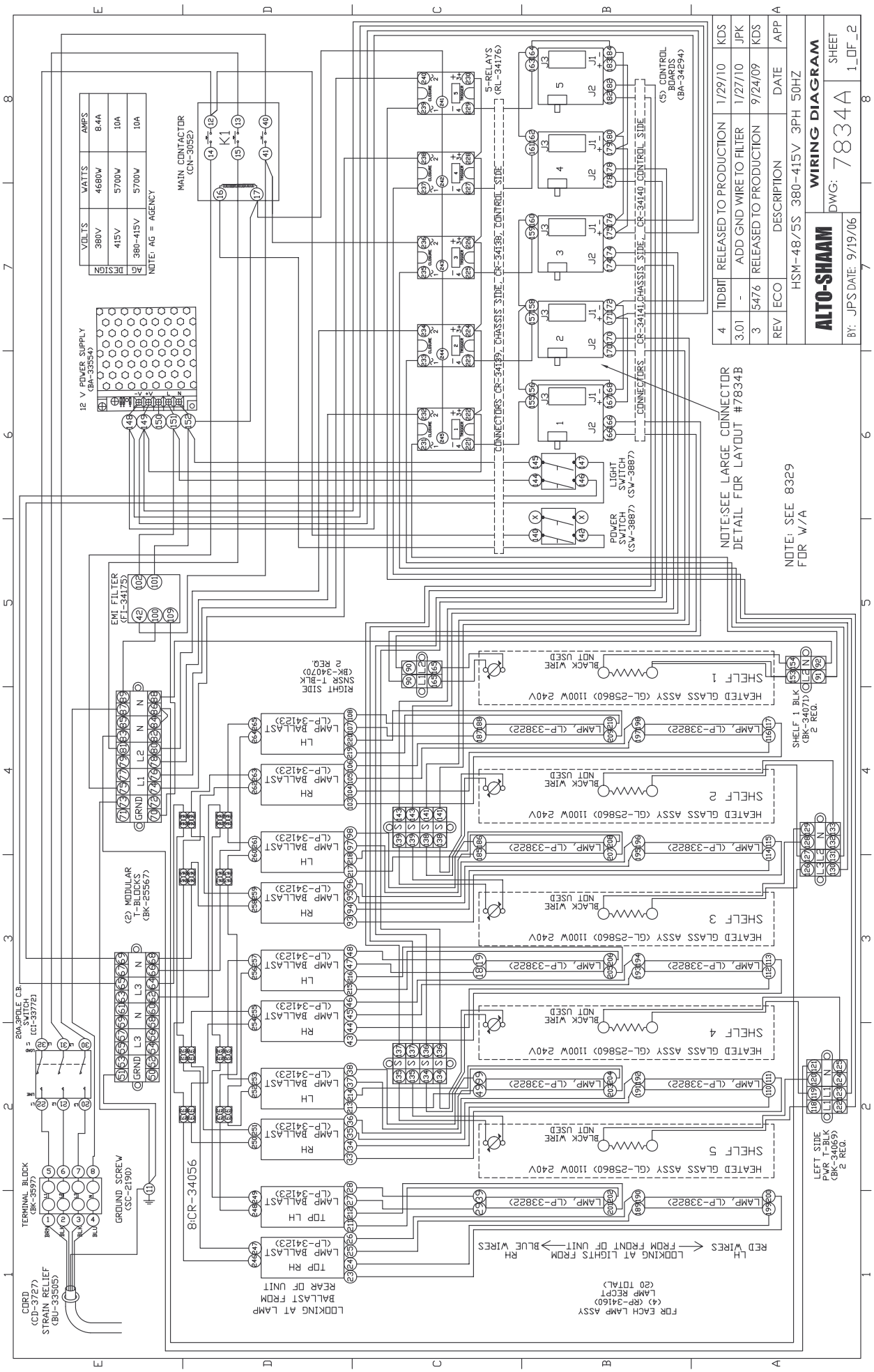
ALTO-SHAAM
WIRING DIAGRAM
DWG: 7834A
SHEET 1_OF_2
BY: JPS DATE: 9/19/06
HSM-48/5S 380-415V 3PH 50HZ
REV ECO DESCRIPTION DATE APP
4 TIDBIT RELEASED TO PRODUCTION 1/29/10 KDS
3.01 - ADD GND WIRE TO FILTER 1/27/10 JPK
3 5476 RELEASED TO PRODUCTION 9/24/09 KDS
NOTE:SEE LARGE CONNECTOR DETAIL FOR LAYOUT #7834B
NOTE: SEE 8329 FOR W/A
MAIN CONTACTOR (CN-3052)
5-RELAYS (RL-34176)
(5) CONTROL BOARDS (BA-34294)
12 V POWER SUPPLY (BA-33554)
EMI FILTER (FI-34175)
(2) MODULAR T-BLOCKS (BK-25567)
20A 3POLE C.B. SWITCH (CI-33772)
TERMINAL BLOCK (BK-3597)
GROUND SCREW (SC-2190)
CORD (CD-3727) STRAIN RELIEF (BU-3505)
8CR-34056
LIGHT SWITCH (SW-3887)
POWER SWITCH (SW-3887)
SHELF 1
SHELF 2
SHELF 3
SHELF 4
SHELF 5
HEATED GLASS ASSY (GL-25860) 1100W 240V
BLACK WIRE NOT USED
LAMP, (LP-33822)
LAMP BALLAST (LP-34123)
LEFT SIDE PWR T-BLK (BK-34069) 2 REQ.
SHELF 1 BLK (BK-34071) 2 REQ.
RIGHT SIDE SNSR T-BLK (BK-34070) 2 REQ.
LOOKING AT LAMP REAR OF UNIT
FOR EACH LAMP ASSY (4) (RP-34160) LAMP RECPT (20 TOTAL)
LOOKING AT LIGHTS FROM FRONT OF UNIT
LH RED WIRES
RH BLUE WIRES

TRANSPORTATION DAMAGE and CLAIMS

All Alto-Shaam equipment is sold F.O.B. shipping point, and when accepted by the carrier, such shipments become the property of the consignee.

Should damage occur in shipment, it is a matter between the carrier and the consignee. In such cases, the carrier is assumed to be responsible for the safe delivery of the merchandise, unless negligence can be established on the part of the shipper.

1. Make an immediate inspection while the equipment is still in the truck or immediately after it is moved to the receiving area. Do not wait until after the material is moved to a storage area.
2. Do not sign a delivery receipt or a freight bill until you have made a proper count and inspection of all merchandise received.
3. Note all damage to packages directly on the carrier's delivery receipt.
4. Make certain the driver signs this receipt. If he refuses to sign, make a notation of this refusal on the receipt.
5. If the driver refuses to allow inspection, write the following on the delivery receipt: *Driver refuses to allow inspection of containers for visible damage.*
6. Telephone the carrier's office immediately upon finding damage, and request an inspection. Mail a written confirmation of the time, date, and the person called.
7. Save any packages and packing material for further inspection by the carrier.
8. Promptly file a written claim with the carrier and attach copies of all supporting paperwork.

We will continue our policy of assisting our customers in collecting claims which have been properly filed and actively pursued. We cannot, however, file any damage claims for you, assume the responsibility of any claims, or accept deductions in payment for such claims.

LIMITED WARRANTY

Alto-Shaam, Inc. warrants to the original purchaser only that any original part that is found to be defective in material or workmanship will, at Alto-Shaam's option, subject to provisions hereinafter stated, be replaced with a new or rebuilt part.

The parts warranty period is as follows:

For the refrigeration compressor on Alto-Shaam Quickchillers™, five (5) years from the date of installation.

For the heating element on Halo Heat® cook/hold ovens, as long as the original purchaser owns the oven.

For all other parts, one (1) year from the date of installation or fifteen (15) months from the shipping date, whichever occurs first.

The labor warranty period is one (1) year from the date of installation or fifteen (15) months from the shipping date, whichever occurs first.

Alto-Shaam will bear normal labor charges performed during standard business hours, excluding overtime, holiday rates or any additional fees.

To be valid, a warranty claim must be asserted during the applicable warranty period. This warranty is not transferable.

THIS WARRANTY DOES NOT APPLY TO:

1. Calibration.
2. Replacement of light bulbs, door gaskets, and/or the replacement of glass due to damage of any kind.
3. Equipment damage caused by accident, shipping, improper installation or alteration.
4. Equipment used under conditions of abuse, misuse, carelessness or abnormal conditions, including but not limited to, equipment subjected to harsh or inappropriate chemicals, including but not limited to, compounds containing chloride or quaternary salts, poor water quality, or equipment with missing or altered serial numbers.
5. Damage incurred as a direct result of poor water quality, inadequate maintenance of steam generators and/or surfaces affected by water quality. Water quality and required maintenance of steam generating equipment is the responsibility of the owner/operator.
6. Damage caused by use of any cleaning agent other than Alto-Shaam's Combitherm® Cleaner, including but not limited to damage due to chlorine or other harmful chemicals. **Use of Alto-Shaam's Combitherm® Cleaner on Combitherm® ovens is highly recommended.**
7. Any losses or damage resulting from malfunction, including loss of product or consequential or incidental damages of any kind.
8. Equipment modified in any manner from original model, substitution of parts other than factory authorized parts, removal of any parts including legs, or addition of any parts.

This warranty is exclusive and is in lieu of all other warranties, express or implied, including the implied warranties of merchantability and fitness for a particular purpose. In no event shall Alto-Shaam be liable for loss of use, loss of revenue or profit, or loss of product, or for any indirect, special, incidental, or consequential damages. No person except an officer of Alto-Shaam, Inc. is authorized to modify this warranty or to incur on behalf of Alto-Shaam any other obligation or liability in connection with Alto-Shaam equipment.

Effective 09/10

ALTO-SHAAM®

RECORD THE MODEL AND SERIAL NUMBER OF THE APPLIANCE FOR EASY REFERENCE.
ALWAYS REFER TO BOTH MODEL AND SERIAL NUMBER IN ANY CONTACT WITH ALTO-SHAAM REGARDING THIS APPLIANCE.

Model: _____ Date Installed: _____
Voltage: _____ Purchased From: _____
Serial Number: _____

W164 N9221 Water Street • P.O. Box 450 • Menomonee Falls, Wisconsin 53052-0450 • U.S.A.
PHONE: 262.251.3800 • 800.558-8744 USA/CANADA FAX: 262.251.7067 • 800.329.8744 U.S.A. ONLY
www.alto-shaam.com

PRINTED IN U.S.A.